XL5000 Computer Quilter

Overview:

ABM International, Inc. introduces the world's most economical quilting machine. The **XL5000 Computer Quilter** has a three axis digital brushless servo control, providing superior quality patterns, ease of pattern and size changes and maintenance free operation. The **XL5000** requires only one operator to stretch and rack the comforter into a frame on its loading table while the machine quilts another comforter simultaneously.

Features & Benefits:

- The **Sewing Head** is a full computer controlled quilting system capable of sewing any pattern on your product.
- A color **Touch Screen** user interface with Pentium computer processor allows for user friendly operation.
- The **SL7847 Frame Changing Table** pneumatically raises and lowers the frames to create ease of loading and removal of the frames from the quilting machine.
- Along with its many other features, the **XL5000** includes a pair of adjustable aluminum frames capable of racking twin through king size comforters.

211 Seegers Avenue, Elk Grove Village, Illinois 60007 PHONE#: (847) 690-0011 FAX#: (847) 690-0074
www.abminternational.com **E-Mail:** abm@ziplink.net

Specifications:

- ✓ Electric: 220V AC 3 Phase
- ✓ Pneumatic: 100 PSI
- ✓ Floor Space: XL5000 Computer Quilter 19' X 19'
  SL7847 Frame Changing Table 7.5' X 9'
- ✓ Weight: 3,000 lbs.
- ✓ Optional sizes up to 135" X 135"

For more information, please contact:

ABM INTERNATIONAL, INC.

18209 Chisholm Trail – Suite #110
Houston, Texas 77060
Telephone: (281) 443-4440 Fax: (281) 443-4404

FOREWORD

The purpose of this manual is to provide operation and maintenance instructions for the XL5000 *Eagle* Computer Quilter manufactured by ABM International, Niles, Illinois U.S.A.

Detailed procedures are supplied wherever required. Where no specific direction is necessary, standard procedures should be used.

Details of the Computer Quilter provided in this manual are subject to change without notice.

NOTICE

ABM products should be used only for the purpose and in the manner intended by their original design. It is recommended that no modifications be made to this product. Any modification of this product will void any expressed or implied warranty.

ABM International

XL5000 *Eagle*

Computer Quilter

Installation, Operation
Maintenance Manual

ABM International
7847 Caldwell Ave.
Niles, IL 60714 USA
Tel: 847-581-0011 Fax: 847-581-0029

TABLE OF CONTENTS

FOREWORD

TABLE OF CONTENTS

INTRODUCTION

SECTION 1: Safety

1.0 Safety Introduction....1.1
1.1 Safety Policy Statement....1.1
1.2 Safety Practices....1.1
1.3 Safety Features of Computer Quilter....1.2

SECTION 2: Installation

2.0 Damage Check....2.1
2.1 Machine Site....2.1
2.2 Site Preparation....2.2
2.3 Power Requirements....2.2
2.4 Unpacking....2.2
2.5 Assembly....2.2
2.6 Pre-Operation Checkout....2.10
2.7 SL 7847 Automatic Loading Table....2.10

SECTION 3: Preliminary Set-up

3.0 Theading Sew Head....3.1
3.1 Setting Frame Size....3.2
3.2 Loading Frame....3.3

SECTION 4: Operation

4.0 System Overview....4.1
4.1 Location of Control Switches/Buttons....4.1
4.2 Operator Menu....4.5
4.3 Operating Instructions....4.5
4.4 Maintenance Menu....4.11
4.5 System Parameters....4.14
4.6 Maintenance Instructions....4.17

SECTION 5: Maintenance

5.0 Maintenance....5.1
5.1 Maintenance Schedule....5.1
5.2 Sewhead Manual....5.2
5.3 Wiring Diagrams....5.32
5.4 Linear Actuators....5.64

SECTION 6: Troubleshooting
6.0 Troubleshooting Guide.....6.1
6.1 Diagnostic Chart.....6.2

SECTION 7: Terminology
7.0 Glossary.....7.1

SECTION 8: ~~Limited~~ Warrantyies
8.0 One year Limited Warranty (Machine.....8.1
8.1 SOFTWARE

SECTION 9: Supplemental Information
9.0 Teach and Learn.....9.1
9.1 Patterns.....9.10
9.2 Ultratech Sewhead Manual.....9.60
9.3 HAND HELD BOOKLET

INTRODUCTION

We at ABM International thank you for your purchase of the XL5000 *Eagle* Computer Quilter. We are committed to designing reliable, easy-to-operate machines and accessories which promote greater productivity. This system will provide a modern, efficient method of meeting your quilting needs.

This manual provides the necessary information required for a proper understanding of the capabilities of the Computer Quilter and will familiarize operating personnel with the proper operation and care of the Computer Quilter in order to maximize machine efficiency with minimum operator effort.

Increased production will result from the use of an ABM SL7847 Frame Changing Table when used in conjunction with the Computer Quilter.

SECTION 1: Safety

1.0 Safety Introduction

As with the operation of all machinery, safe operation of the Computer Quilter is a major concern of ABM International. The purpose of this section is to inform operating personnel of the Computer Quilter as to its safe and prudent operation.

We have attempted to recommend the most effective methods and cautions to warn against actions that could cause personal injury, or make equipment unsafe. It is important to understand that ABM cannot anticipate, or list all conceivable methods and warn of the possible hazards. In the interest of promoting safety, ABM advises that operating personnel should always make sure that personal safety and the safe operation of the machine will not be adversely affected by their actions.

It is imperative that the operating personnel of the Computer Quilter read and understand the information in this manual before operating the machine.

1.1 Safety Policy Statement

The conservation of the assets of any company, which include the buildings, equipment, supplies and inventories as well as personnel, must be, and is the responsibility of all levels of management. The purpose of a Personal and Property Conservation Program is to insure that all phases of management recognize that personnel and property conservation are both inseparable parts of a company's objective...to produce quality products at the lowest possible cost.

Safety of personnel in every aspect must be of first consideration. The implementation of a conservation program will eliminate human suffering and effectively lower the direct and indirect costs resulting from employee injury. It will substantially reduce the exposure and probability of damage and/or loss of company's physical assets.

1.2 Safety Practices

The safety practices must be observed to ensure safe operation of the Computer Quilter.

1. Read and understand the operating instructions of the Computer Quilter before operating.

2. Use extreme caution when working around the Quilter's electrical controls.

3. Keep hands or other body parts away from moving parts of the Quilter.

4. Wear appropriate personal safety protection.

5. Stop the Quilter immediately at any sign of malfunction or danger.

6. Do not climb, walk or stand on the Quilter.

7. Do not crawl under the Quilter for any reason during the operation of the machine.

8. Do not reach into the Quliter at any time during the operation of the machine.

9. Before starting the Quilter, ensure that no loose tools, bars or parts are lying in or on any part of the machine.

10. Proper fire fighting equipment should be in good operating condition and kept near in the event of fire.

11. Never attempt to service any of the pneumatic components until the unit is relieved of all air pressure.

12. Do not wear loose clothing or jewelry when operating the Quilter.

13. Always keep hair from coming in contact with moving parts.

1.3 Safety Features

SECTION 2: Installation

2.0 Damage Check

Upon receipt of the XL5000 Eagle Computer Quilter , inspect the machine for exterior damage. Record any damage before opening and notify the carrier immediately. Also notify ABM International, 7847 Caldwell Ave, Niles, IL, 60714, USA. Tel: 847-581-0011 o Fax: 847-581-0029.

NOTICE

The Computer Quilter is precision built and accurately adjusted prior to shipment. Failure to notify ABM of any damage will void any expressed or implied warranty and will waive ABM's responsibility of damage.

2.1 Machine Site

The location of the machine may be chosen to suit the individual requirements of a given production operation. See *Figure 2.1* for floor space requirements.

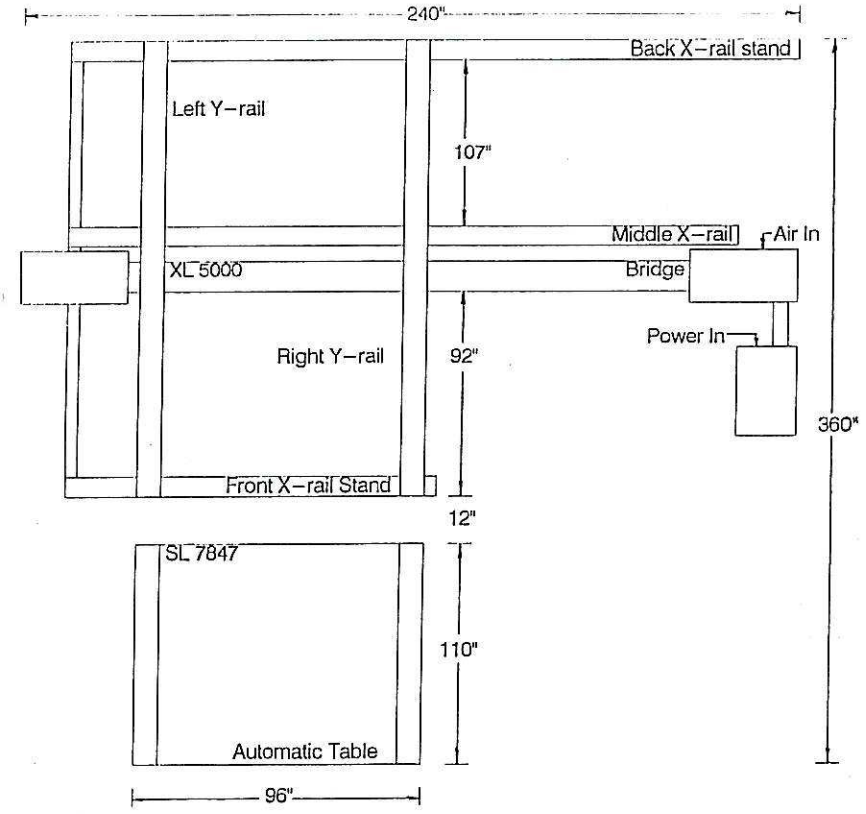

Figure 2.1

2.2 Site Preparation

The Computer Quilter requires no extraordinary site preparation. The work area should be clean and level and capable of supporting approximately 3000 pounds. Air and Electrical drop must be accessible. The Computer Quilter should have a clear work area around the entire perimeter.

2.3 Power Requirements

The Computer Quilter requires a single phase power circuit of 220VAC +/-5%, 60 Hz. For those customers whose power supply is not 220VAC an optional machine mounted boost transformer may be purchased.

There must be an accessible air drop of at least 100PSI.

See *Figure 2.1* for location of power and air hook-ups.

2.4 Unpacking

Remove bonding Straps and being careful to retain all hardware from the packaging. Remove all protective wrapping and wadding, again being careful to retain all hardware. Remove all cartons, assemblies, and equipment from the skids. See *Figure 2.2* for a list of cartons, assemblies, and equipment. Notify ABM if any parts are missing.

NOTICE

The Computer Quilter is thoroughly tested and inspected prior to shipment. Failure to notify ABM of missing parts will waive ABM's responsibility for those parts. Replacement will be at customer's expense.

2.5 Assembly

The Computer Quilter requires no special tools for assembly. The time needed to assemble the machine is approximately one day.

To properly set-up the Computer Quilter, proceed with the following steps:

Receiving Checklist

Item	Description	Quantity Shipped	Quantity Received
1	Computer Quilter Bridge	1	
2	Computer Cabinet (Attached to Bridge)	1	
3	Right Y-Rail (Attached to Bridge)	1	
4	Back X-Rail Stand	1	
5	Front X-Rail Stand	1	
6	Left Y-Rail	1	
7	Back X-Drive Shaft	1	
8	Front X-Drive Shaft	1	
9	T-Nuts	8	
10	5/16 18 x 1" Bolts	8	
11	Chain Coupling Double Chains	4	
12	Chain Coupling Clips	4	
13	Chain Coupling Pins	4	
14	Chain Coupling Covers	4	
15	Machine Legs	8	
16	Thread Stand	1	
17	Thread Sensor	1	
18	Tool Kit	1	
19	***Ultra Lux*** Thread Samples	4	
20	Needles	10	
21	Hand Held Terminal	1	
22*	Automatic Loading Table	1	
23*	Adjustable Frames	2	
24*	Auto Table Air Hose	1	

* Options to Computer Quilter

Figure 2.2

A. Set the bridge in desired location, place machine legs under bridge and level.

B. Set the X-rail stands in position and level. See *Figure 2.3.*

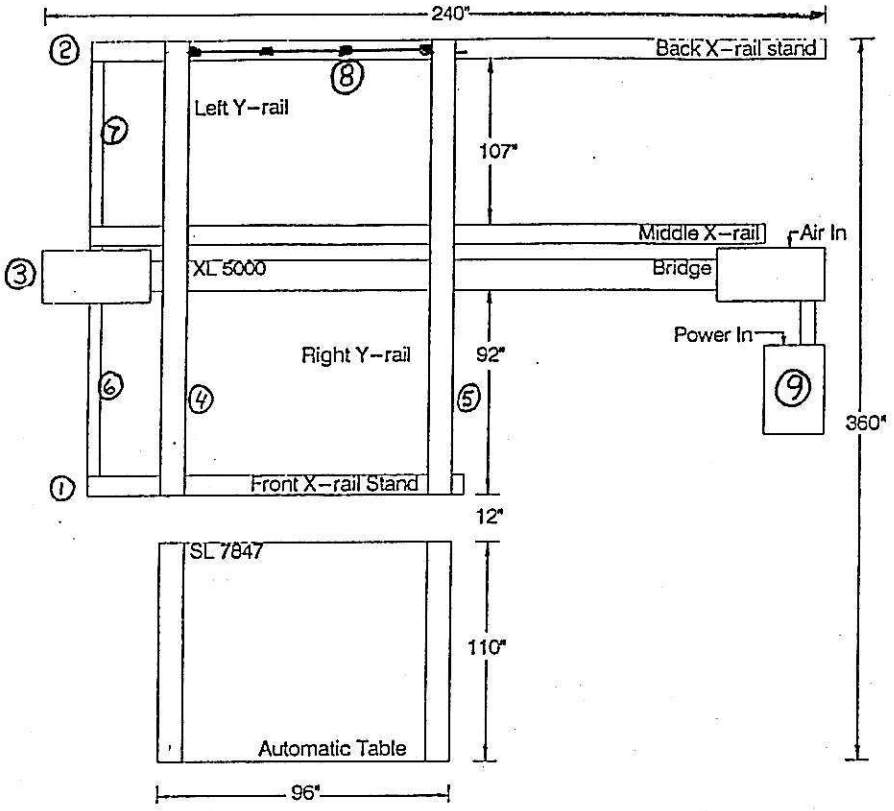

1. Front X-Rail
2. Back X-Rail
3. Bridge
4. Left Y-Rail
5. Right Y-Rail
6. Front X Drive Shaft
7. Back X Drive Shaft
8. Y Drive Shaft
9. Control Cabinet

Figure 2.3

C. Move X-rail slides as far left as you can to ensure full movement.

D. Connect the back X-drive shaft between the bridge and back rail stand via couplings. Be certain to use all keys and set screws. See *Figure 2.4.*

E. Follow same procedure for front X-drive shaft and rail stand.

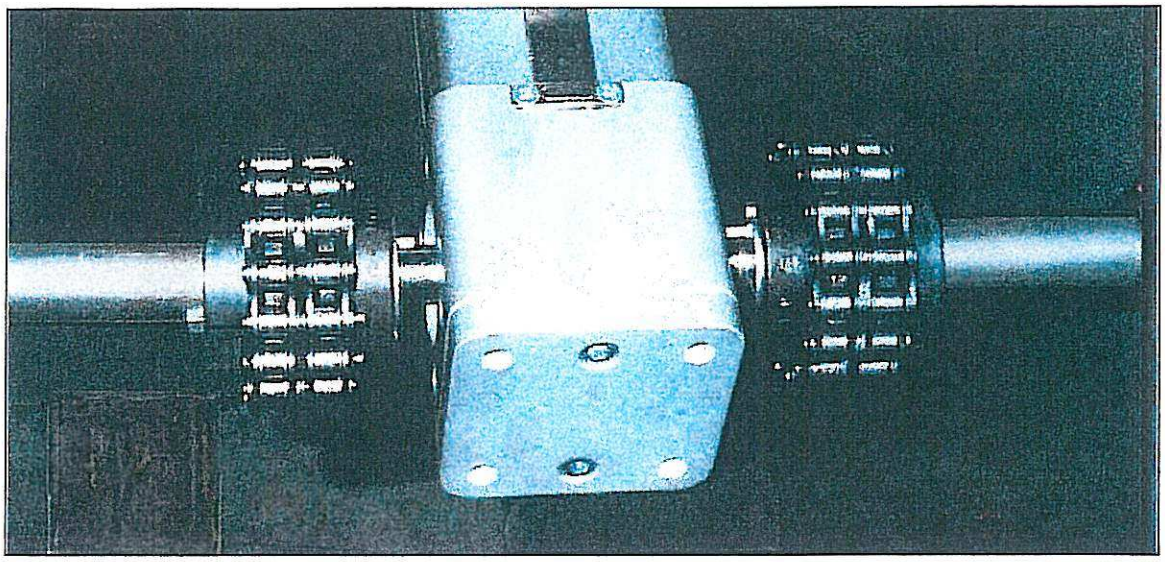

Figure2.4

F. Put the coupling covers in place, being sure to use the rubber gaskets provided.

G. As shown in *Figure 2.3*, set Y-rails on top of the X-rails.

CAUTION

The right Y-rail is attached to the bridge via a wire carrier. When setting in place, be careful not to twist or damage wires or air hoses.

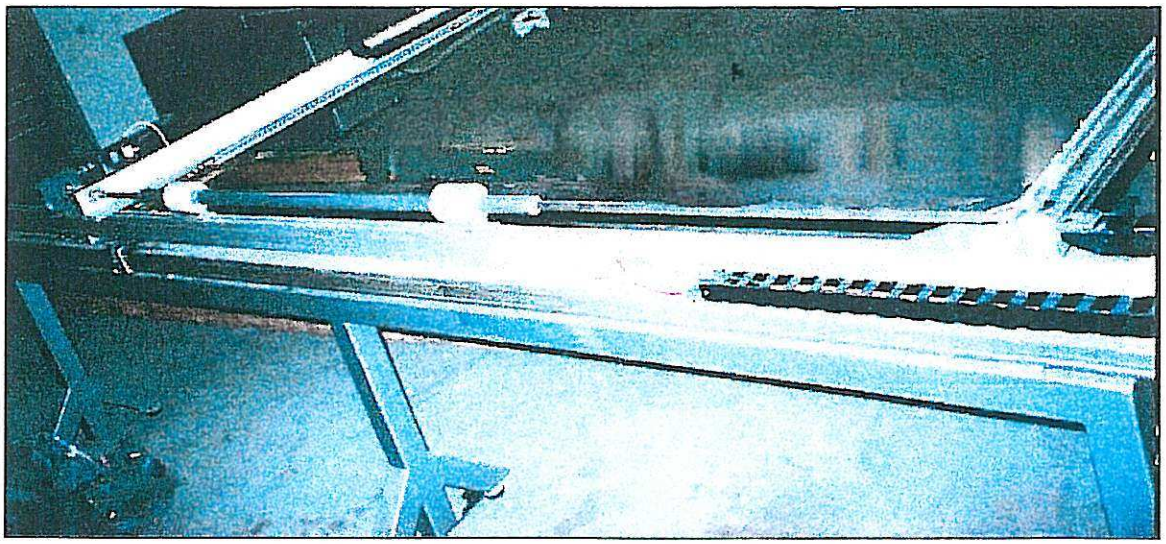

Figure 2.5

H. Tighten down Y-rails using 5/16 18 x 1" bolts and special T-nuts which slide inside T-slot on X-rails.

I. Mount Y drive shaft to the back X-rail via nylon bushings and connect couplings on both Y-rails. (There are two set screws which allow the shaft to extend and retract depending on size requirements). See *Figure 2.5.*

J. The distance from the rear of the frame pusher on the Y-rail to center of the square drive shaft should be the same on the right as it is on the left. See *Figure 2.6.*

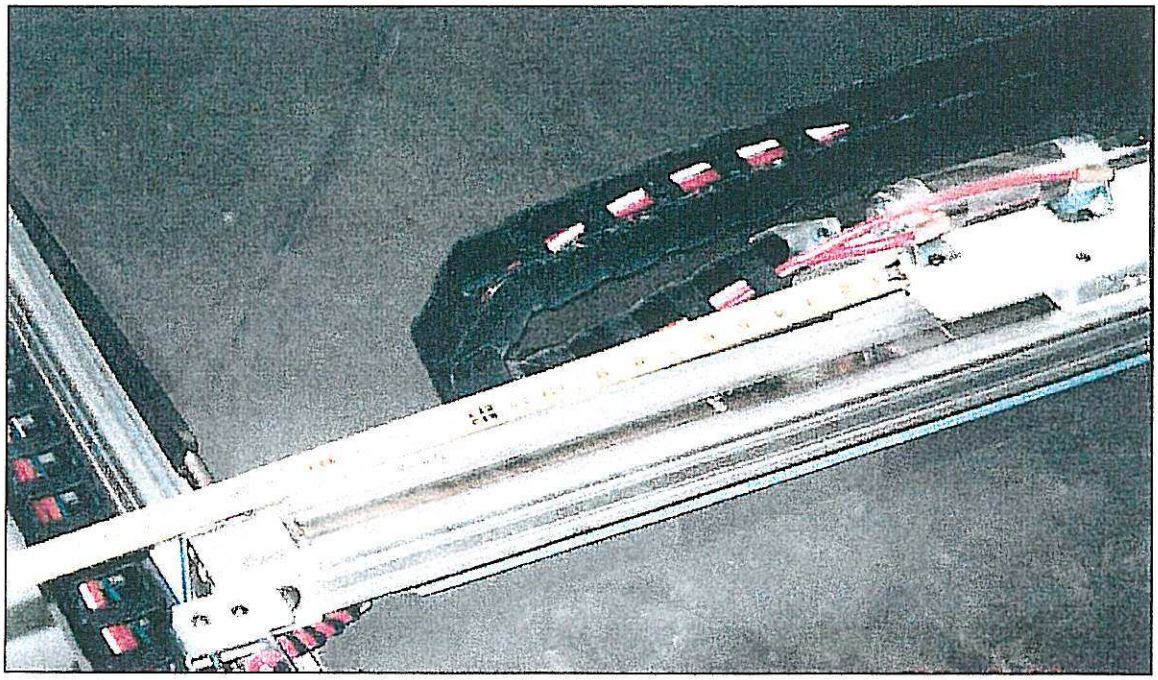

Figure 2.6

K. Connect wire plugs and air hoses at the rear of each Y-rail. See *Figure 2.7.*

L. Connect cable plugs for Y-axis servo motor. See *Figure 2.7.*

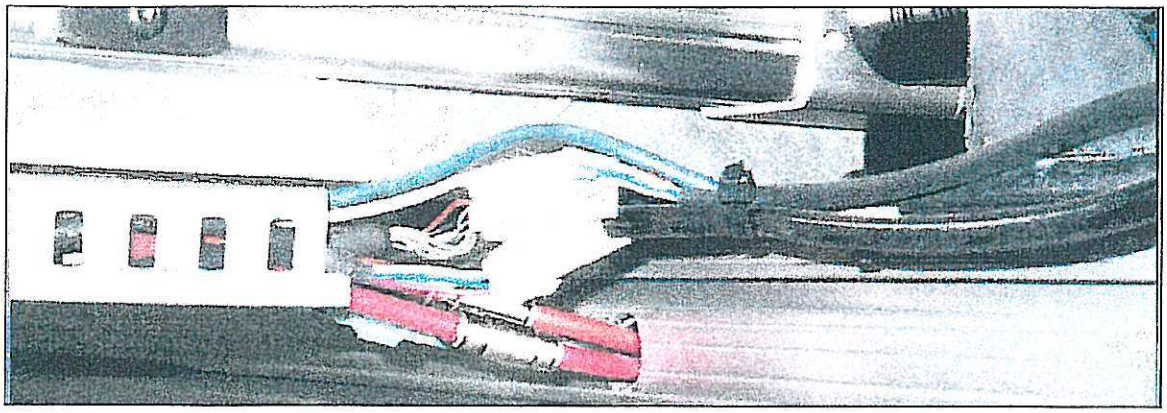

Figure 2.7

M. Mount the Thread stand to the top of the bridge and connect the wire plug for theThread sensor. See *Figure 2.8.*

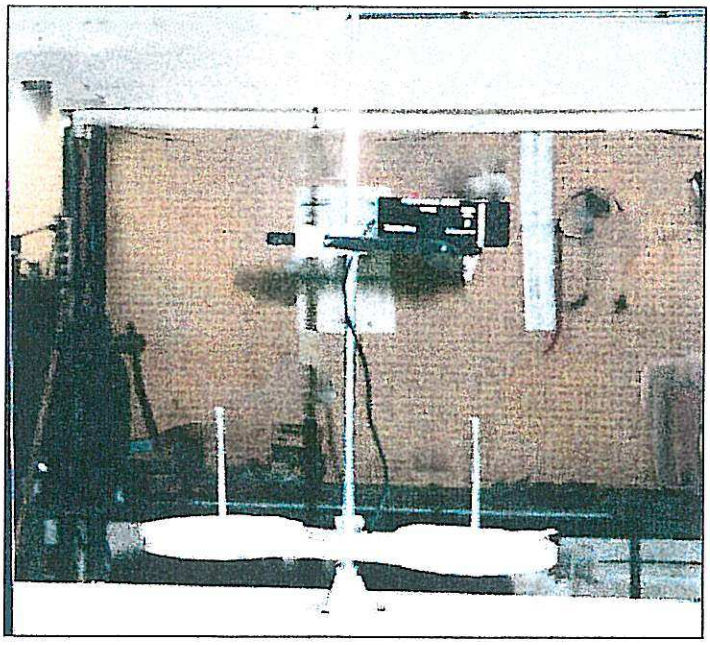

Figure 2.8

N. Place the right Y-rail as far right as you can keeping it 6" from the sew head. (this becomes your 0 reference). See *Figure 2.9*.

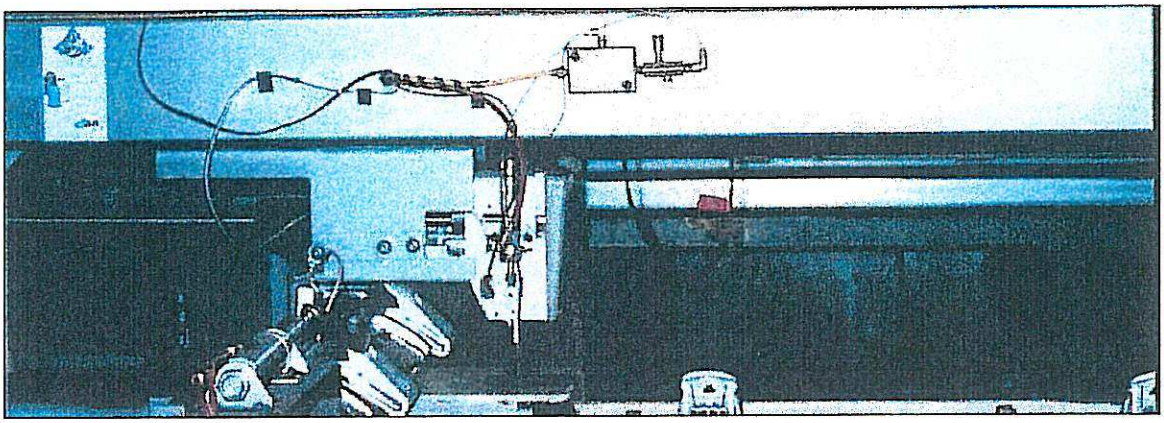

Figure 2.9

O. The factory power line must be connected to the computer cabinet which is separate from the bridge. A junction box is located on the lower left side. See *Figure 2.10*.

CAUTION
All switches must be set in the "OFF" position when connecting power.

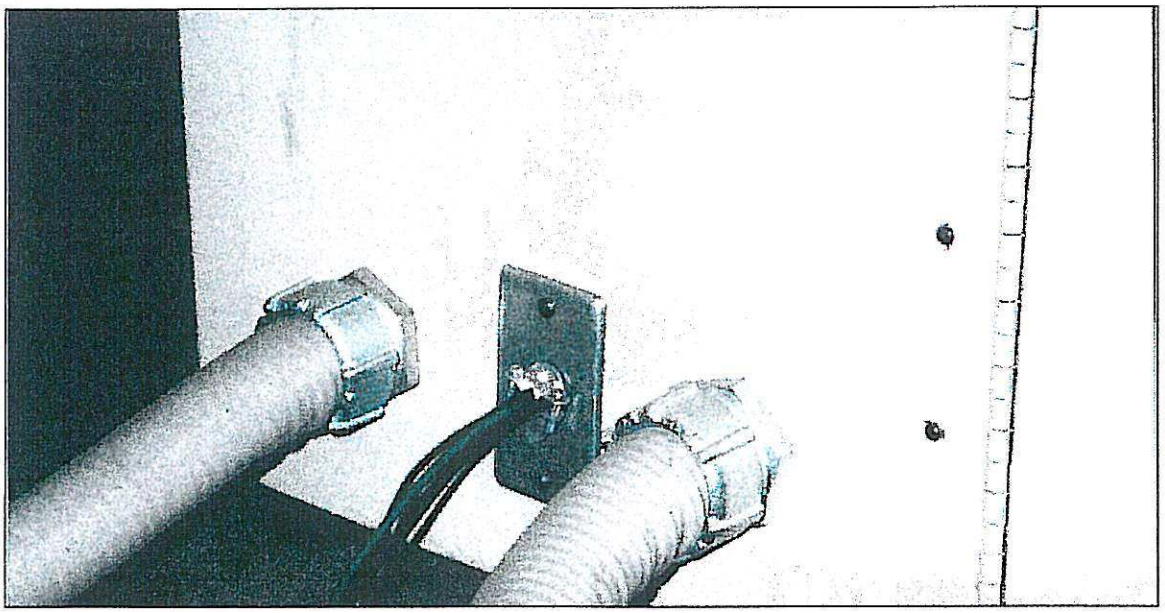

Figure 2.10

P. The air hose from the compressor must be attached to the air filter located on the rear of the right endstand. See *Figure 2.11*.

> CAUTION
> When air pressure is applied to the machine, some components will activate. Keep hands clear.

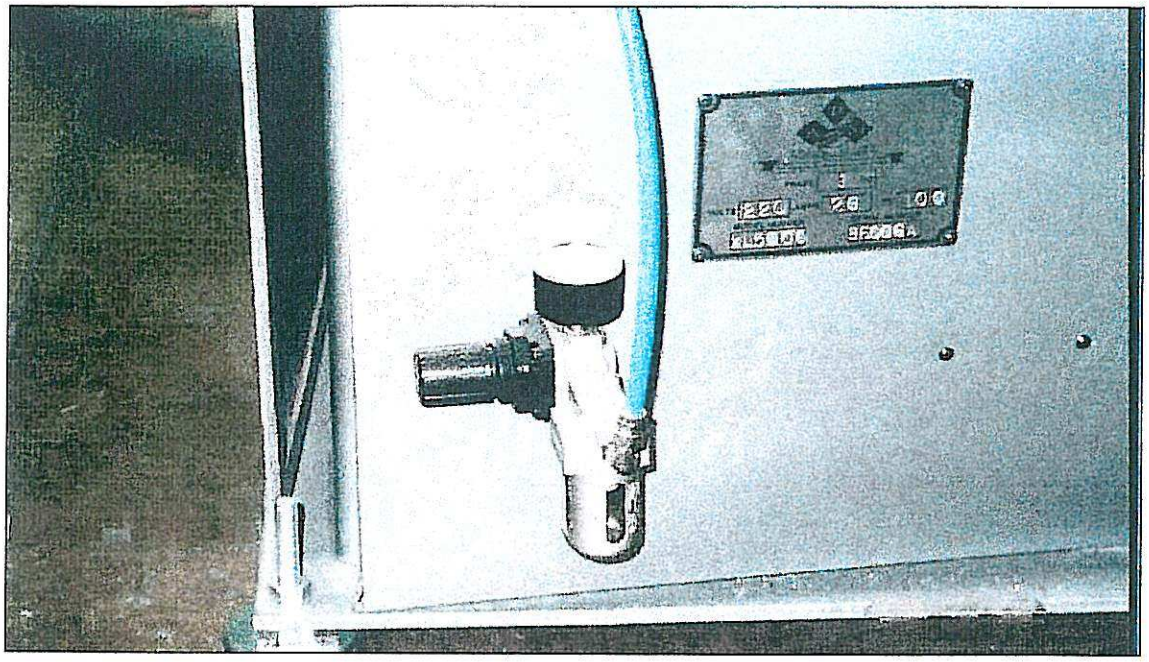

Figure 2.11

R. Contact your nearest ABM Dealer if any problems arise.

NOTICE

When air pressure is applied to the machine, some components will activate. Keep hands clear.

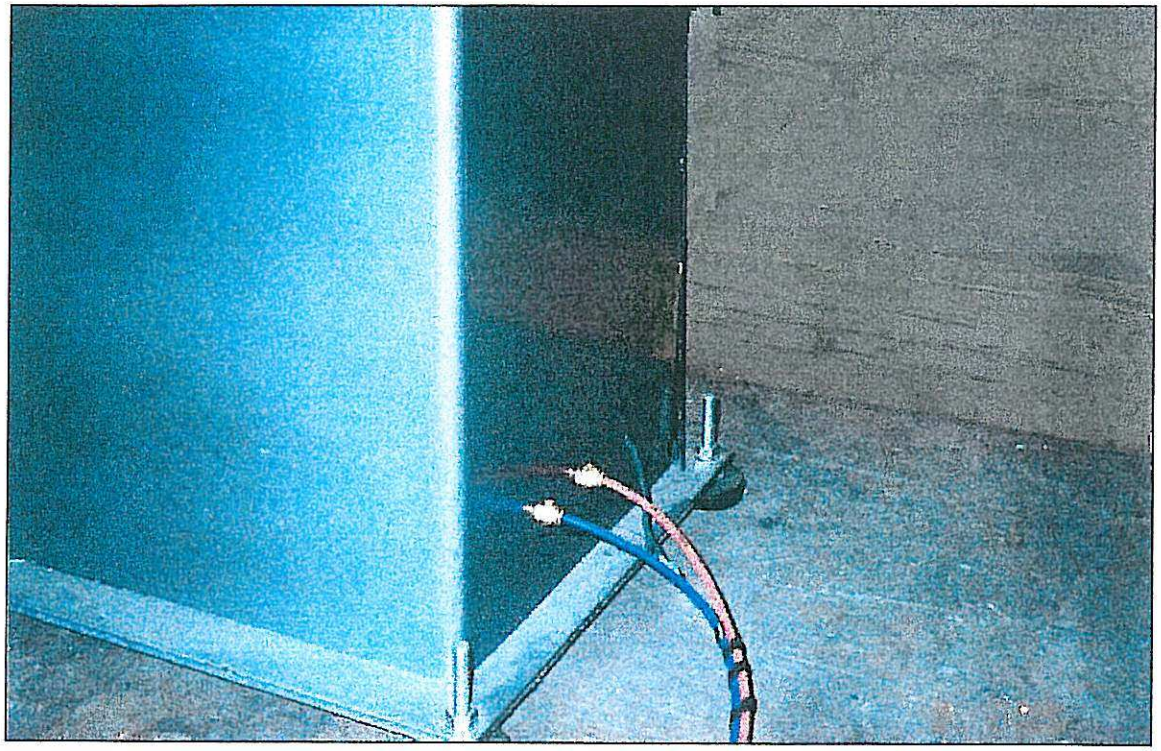

Figure 2.12

SECTION 2A: Installation of Operating System

2A.0 Install Pmac Board into Computer

A. Remove computer cover.

B. Plug pmac board into open slot.

> CAUTION
> Ensure the Pmac board has the correct software chip plugged into the board. The correct version is V1.15G dated 1/12/95.

C. Remove slot cover from slot next to pmac board.

D. Place protective tape around edge of open slot.

E. Plug 34-pin ribbon cable into J5 jopt plug of pmac.

F. Plug 60-pin ribbon cable into J11 jmach plug of pmac.

G. Replace computer cover.

H. Set the voltage switch on the back of computer to 220V.

> CAUTION
> The voltage switch must be set at 220V or damage will occur to computer.

2A.1 Install Computer into Computer Quilter

A. Set computer into shelf on the front door of the computer cabinet.

B. Plug power cord from the terminal strip into computer.

C. Plug the power cord from the color touchscreen monitor into the computer.

D. Plug the mouse cord from the color touchscreen monitor into the computer.

E. Plug the 34-pin ribbon cable from the computer into the Input/Output board on the electronic panel.

NOTICE
The 34-pin ribbon cable is plugged into the left side of the I/O Board.
If in the wrong place, the inputs and outputs will not operate.

F. Plug the 60-pin ribbon cable from the computer into the 60-pin connector on the electronic panel.

2A.2 Apply Power to Computer Quilter

A. Connect a factory power line to junction box on the computer cabinet.

CAUTION
All switches must be set in the "OFF" position when connecting power.

B. Connect a factory ground wire to junction box on the computer cabinet.

C. Connect a factory air line to the combo unit on the back of right end stand.

NOTICE
The machine specifications include: 1 phase, 220 volts, 20 amps; 100 psi.

D. Turn on the "Main Power " switch.

CAUTION
Be prepared to shutdown the machine in case a servomotor is in runaway.

E. Turn on the computer.

F. Turn on the color touchscreen monitor.

2A.3 Access Windows Program Manager

A. Double-click the upper right-hand corner of the main menu screen. A message screen will appear with a box for entering the password.

B. Press the white "Password" box. A keyboard screen will appear. Now enter the 4-character password and press the "O.K." key. A message screen will appear again.

C. Press the "O.K." key and the "Program Manager" icon will appear in the lower left-hand corner of the screen. Double-click the icon and the program manager window will appear.

> NOTICE
> If any additional windows on the screen are open, it is neccesssary to close them to access the program manager window.

2A.4 Calibrate the Color Touchscreen

A. Find the "MicroTouch Touchscreen" icon and double-click it. A microtouch touchscreen window will appear.

B. Double-click the "Micro Touch Touchscreen" icon and the touchscreen control panel screen will appear.

C. Press the "Calibrate" key and follow the on-screen instructions for calibrating the touchscreen. After the calibration is complete, press the "O.K." key and the microtouch touchscreen window will reappear.

2A.5 Access the PMAC Executive

A. Find the "Main" icon and double-click it. A main window will appear.

B. Double-click the "File Manager" icon and a file manager window will appear.

C. Find the "Deltatau" directory on the left side of the window and hightlight it. The files contained in that directory will be listed on the right side of the window.

D. Find the "Pe3.exe" file. Double-click the file name and the PMAC Executive screen will appear.

2A.6 Configure the PMAC Board

Clear PMAC Board

A. Close the "Position" and "Watch" windows.

B. In the "Terminal" window, type the following commands using a keyboard:

$$$***	*(Return)*
Save	*(Return)*
M0..1023->*	*(Return)*
M0..1023=0	*(Return)*
P0..1023=0	*(Return)*
Q0..1023=0	*(Return)*
Save	*(Return)*
Define ubuffer 256	*(Return)*

Restore PMAC Configuration

A. At the menu across the top of the pmac executive screen, hightlight "backup" and a menu window will appear.

B. Highlight "restore configuration" and a restore full configuration window will appear.

C. Highlight the configuration file (ie: abmcnfgb.dat) and press the "O.K." key.

NOTICE
When restoring the PMAC configuration, always be certain to hightlight the abmcnfg.dat file with the latest letter in the alphabet.

D. In the terminal window, type:

Save	*(Return)*

CAUTION
If any errors occur when restoring the configuration file, contact the ABM International Technical Department immediately at (847) 581-0011.

2A.7 Set PMAC Motor Tuning Varibles

The servo motor tuning is preset to specified default settings when the PMAC board is configured. See *Table 2A.1* for a list of the default settings.

PMAC Motor Tuning Default Settings						
	X-Motor (#1)		Y-Motor (#2)		Z-Motor (#3)	
Proportional Gain:	I130	180000	I230	150000	I330	20000
Derivative Gain:	I131	1800	I231	1000	I331	0
Velocity FF Gain:	I132	2000	I232	1200	I332	0
Integral Gain:	I133	3900	I233	7000	I333	0
Integration Mode:	I134	1	I234	1	I334	0
Accel FF Gain:	I135	17000	I235	12000	I335	0
DAC Offset:	I129	0	I229	0	I329	0
DAC Limit:	I169	32766	I269	32756	I369	32766
Servo Cycle / ext:	I160	0	I260	0	I360	0

Table 2A.1

Occasionally, the motor tuning settings will need to be fine tuned in order to maximize the performance of the system. To adjust the motor tuning settings, follow these steps:

A. At the menu across the top of the pmac executive window, highlight "configure" and a menu window will appear.

B. Highlight "tuning" and a PID tuning screen will appear. Use the "page up" and "page down" keys of the keyboard to scroll to the appropriate motor screen. (*Motor #1=X, Motor #2=Y, Motor #3=Z*).

C. In the original gains window of the PID tuning screen, Highlight the variable to be changed, enter the new value, and press the "enter key" of the keyboard.

D. Once all the variables have been changed, press the "exit tuning" key and the pmac executive screen will reappear. The motor tuning settings have now been changed.

2A.8 Return to Main Menu Screen

A. At the menu across the top of the pmac executive screen, highlight "file" and a menu window will appear.

B. Highlight "exit" and a window will appear asking for confirmation to leave the pmac executive screen. Press the "O.K." key. The file manager window will reappear.

C. Find the "abm" directory on the left side of the window and highlight it. The files contained in that directory will be listed on the right side of the window.

D. Find the "Abmxl.exe" file. Double-click the file name and the Main Menu screen will appear.

2A.9 Set Servo Amplifier User Constants

A. Plug the Servo Amplifier Digital Operator into the operator socket of the servo amplifier to be set.

> NOTICE
> For more information on using the Servo Amplifier Digital Operator, refer to section 9.3 of the Installation, Operation, Maintenance Manual.

B. Press the "Dspl/set" key of the digital operator until "Cn-00" appears on the readout.

C. Press the "∧" and "∨" keys to scroll to the appropriate user constant (ie. Cn-01).

D. Use the default settings listed in *Table 2A.2* to set the user constants for each servo amplifier.

Servo Amplifier User Constant Default Settings

		X-axis Motor	Y-axis Motor	Z-axis Motor
Cn-01	Bit 2	on	on	on
	Bit 3	on	on	on
	Bit 9	on	on	
	Bit b	on	on	
Cn-02	Bit 0	on	on	on
Cn-03		450	450	450
Cn-04		20	20	50
Cn-05		10000	10000	10000
Cn-08		150	150	120

Table 2A.2

E. Unplug the Servo Amplifier Digital Operator from the last amplifier set and turn "off" the main power.

CAUTION

The user constant settings are not saved to the amplifier until the power is turned "off". Erratic operation may occur without the proper settings for the servo amplifiers.

SECTION 2B: Test Procedure

2B.0 X and Y-Axis Motion

A. Turn on the "Main power" switch. The main menu appears.

B. Press the "Operator" key and the operator screen will appear.

C. Press the "Home" key and the jog screen will appear.

D. Plug the Servo amplifier hand controller into the X-axis amplifier and set the display to read the torque information in "Un-02".

E. Press the "⇐" or "⇒" to jog the machine in the X direction. Record the torque reading from the hand controller.

NOTICE
Jog the machine left to right in the X-axis 12-15 times to get an accurate torque reading.

F. Plug the Servo amplifier hand controller into the Y-axis amplifier and set the display to read the torque information in "Un-02".

G. Press the "⇑" or "⇓" to jog the machine in the Y direction. Record the torque reading from the hand controller.

NOTICE
Jog the machine front to back in the Y-axis 12-15 times to get an accurate torque reading.

CAUTION
Ensure both the X & Y-axis are moving in the correct directions. To reverse directions, change the setting of Cn-02 Bit 0.

2B.1 X & Y-Axis Overtravel Circuit

A. From the jog screen, press the "⇑" key to jog the machine in the +y direction. While the machine is jogging, have the back y-overtravel switch depressed to stop the machine.

B. Press the "⇓" key to jog the machine in the -y direction. While the machine is jogging, have the front y-overtravel switch depressed to stop the machine.

CAUTION

The overtravel switches are designed to protect the sewhead in the case of a catastrophic failure. If they are not operational, severe damage can occur to the sewhead.

C. Press the "⇐" key to jog the machine in the -x direction. While the machine is jogging, have the right x-overtravel switch depressed to stop the machine.

D. Press the "⇒" key to jog the machine in the +x direction. While the machine is jogging, have the left x-overtravel switch depressed to stop the machine.

E. Press the "Previous" key to return to the operator screen.

2B.2 Z-Axis (Sewhead) Motion

A. Press the "Main" key on the operator screen to return to the main screen.

B. Manually activate the "Oiler" port of the valve block until oil reaches the sewhead and sewing base.

CAUTION

Damage will occur to the sewhead and sewing base if the machine is run without priming it with oil.

C. Press the "Maintenance" key to access the maintenance menu. Follow the instructions in **Section 4.4 Maintenance Menu**.

D. From the maintenance menu, press the "Encoder check" key and the encoder check screen will appear.

E. Plug the Servo amplifier hand controller into the Z-axis amplifier and set the display to read the torque information in "Un-02".

F. Press the "1000 rpm" key and let the sewhead run for 20 minutes. Record the torque reading from the hand controller.

CAUTION

Ensure the Z-axis (Sewhead) is rotating in the correct direction. To reverse directions, change the setting of Cn-02 Bit 0.

G. Press the "2500 rpm" key and let the sewhead run for 20 minutes. Record the torque reading from the hand controller.

2B.2 Servo Disable Circuit

A. From the encoder check screen, press the "Enable X" key to kill power to the x-axis servo motor. Turn the x-axis drive shaft to verify the servo motor power has been killed.

B. Press the "Enable Y" key to kill power to the y-axis servo motor. Turn the y-axis drive shaft to verify the servo motor power has been disabled.

C. Press the "Enable Z" key to kill power to the z-axis servo motor. Rotate the z-axis drive shaft to verify the servo motor power has been disabled.

D. Press the "Previous" key to return to the maintenance menu.

2B.3 Output Relay Circuit

A. From the maintenance menu, press the "Input/output" key and the input /output screen will appear.

B. Press the "On" key for the oil pump. The light on the screen will turn green, the light on the red output relay will turn on, and the oil pump will activate.

C. Press the "On" key for the thread cutter. The light on the screen will turn green, the light on the red output relay will turn on, and the thread cutter will move to the cut position.

D. Press the "On" key for the thread lock. The light on the screen will turn green, the light on the red output relay will turn on, and the tension assembly will activate.

E. Press the "On" key for the needle cooler. The light on the screen will turn green, the light on the red output relay will turn on, and the needle cooler will activate.

NOTICE
The air flow for the needle cooler is controlled by the flow control mounted to the back of the top beam of the bridge.

F. Press the "Off" key for both the frame lock and frame release.

G. Press the "On" key for the frame lock. The light on the screen will turn green, the light on the red output relay will turn on, and the frame locks will move to the lock position.

H. Press the "On" key for the frame release. The light on the screen will turn green, the light on the red output relay will turn on, and the frame locks will move to the open position.

I. Press the "On" key for the pressure foot lifter. The light on the screen will turn green and the light on the red output relay will turn on.

NOTICE

The pressure foot output relay is for signal output only. The pressure foot itself is activated by the frame lock and frame release.

J. Press the "On" key for the thermal cutter. The light on the screen will turn green and the light on the red output relay will turn on.

K. Press the "Off" key for all outputs. The lights on the screen will turn black and the lights on the red output relays will turn off.

2.B4 Input Relay Circuit

CAUTION

The inputs are automatically disabled when you enter this screen. They can be manually enabled by pressing the "Inputs Disabled" key. To avoid damage to the machine, always test the inputs when they are DISABLED.

A. At the control panel mounted to the y-rail, push the "Start" button. The light on the screen will turn green and the light on the white input relay will turn on.

B. Push the "Stop" button. The light on the screen will turn green and the light on the white input relay will turn on.

C. Push the "Restart" button. The light on the screen will turn green and the light on the white input relay will turn on.

D. Push the "Home" button. The light on the screen will turn green and the light on the white input relay will turn on.

E. Push the "Frame Lock" button. The light on the screen will turn green and the light on the white input relay will turn on.

F. Flip the "Sewhead on/off" switch to the on position. The light on the screen will turn green and the light on the white input relay will turn on.

G. Flip the "Sewhead on/off" switch to the off position. The light on the screen will turn black and the light on the white input relay will turn off.

H. At the frame pusher of the right y-rail, push the frame lock switch. The light on the screen will turn green and the light on the white input relay will turn on.

I. At the left y-rail, push the frame lock switch. The light on the screen will turn green and the light on the white input relay will turn on.

J. At the thread stand, stick a needle into the hole of the thread sensor and wiggle it. The light on the thread sensor will flicker, the light on the screen will turn green, and the light on the white input relay will turn on.

K. Press the "Previous" key to return to the maintenance menu.

2B.5 Sewhead Light

A. Flip the switch on the sewhead light to turn it on.

2B.6 Set Default Parameters

A. Press the box of the parameter to be changed. A number pad screen will appear.

B. Enter the desired number and press the "O.K." key. See *Table 2B.1*.

C. Press the "Save parameters" key.

D. Press the "Default parameters" key.

Operating System Parameter Default Settings	
	Setting
Maximum Feedrate	1000 IPM
Feedrate	720 IPM
Rapid Feedrate	1000 IPM
Bed Size	Sewing area of machine
Jogging Feedrate	600 IPM
Stitches per Inch	6 SPM
Needle up Position	55°
Feedrate Acceleration	250 IPM
Patterns per Bobbin	5 PPB
Scale	X 10 Y 10
Backtack	Yes
Backtack Length	1"
Backtack Stitches/Inch	6 SPI
Number of Backtacks	1
Thread Cut Delay	750 MS
No-Sew Feedrate	350 IPM
Revs per Oil Injector	5000
Thread Cut Enable	Yes
Thread Break Delay	1000 MS
Thread Sensor Enable	Yes

Table 2B.1

2B.5 Set Trim Position

A. From the maintenance menu, press the "Set Trim Position" key and the set trim position screen will appear.

B. Set the trim position. Follow the instructions in **Section 4.6 Maintenance Instructions-Set Trim Position**.

C. Press the "Previous" key to return to the maintenance menu.

D. Flip the "Sewhead" switch on the control panel on and off to check for the proper needle position.

2B.6 Load Test Pattern

A. From the maintenance menu, press the "Load pattern from drive" key and and the load pattern screen will appear.

B. Load the testbox.pat pattern. Follow the instructions in **Section 4.6 Maintenance Instructions-Load Pattern From Drive**.

D. Press the "Previous" key to return to the maintenance menu.

E. Press the "Main menu" key to return to the main menu.

2B.7 Run Test Pattern

A. Press the "Operator" key and the operator screen will appear.

B. Press the "Load Pattern" key to see available patterns. Scroll through the patterns and press the picture of the testbox.pat pattern. The pattern will download and return to the operator screen.

C. Press the "Home" key and the jogging screen will appear. Use the arrow keys to jog the machine to a home position approximately 12" in from the corner of the frame.

D. Press the "Home" key and the x and y coordinates will reset to 0. Press the "Previous" key to return to the operator screen.

E. Press the "Start" button on the control panel to begin normal operation.

CAUTION

To avoid possible damage to the machine, the first run of the testbox pattern should be done with the sewhead turned off at the control panel.

F. After completing the first pass of the testbox pattern, flip the "Sewhead" switch to the on position. Press the "Start" button to begin normal operation.

G. After completing the second pass of the testbox pattern, press the "Main menu" key to return to the main menu.

2B.8 Sew Test Pattern

A. Turn off the "Main power" switch.

B. Time and thread the sewhead. Follow the instructions in **Section 5.2 Sewhead Manual**.

C. Turn on the "Main power" switch and the main menu will appear.

D. Press the "Operator" key and the operator screen will appear.

E. Place a test comforter into the machine and press the "Start" button to begin normal operation.

Section 3: Preliminary Set-up

3.0 Threading the Sewing Head

Begin this procedure by placing a spool of top thread onto the thread stand postioned on top of the bridge. Check to see that the thread sensor is properly mounted and plugged in. See *Figure 3.1*.

> NOTICE
> To acheive maximum machine efficiency and product quality it is recommended that *UltraLux* Thread be used with the Computer Quilter.

Run the top thread up through the thread guide at the top of the thread stand, down through the thread sensor and through the thread guide located at the front of the bridge. Then thread the sewing head in the normal manner.

> NOTICE
> When the thread sensor is working properly, the red light will flash as the thread passes through.

Lastly, insert a bobbin into the bobbin case and place the bobbin case into the hook.

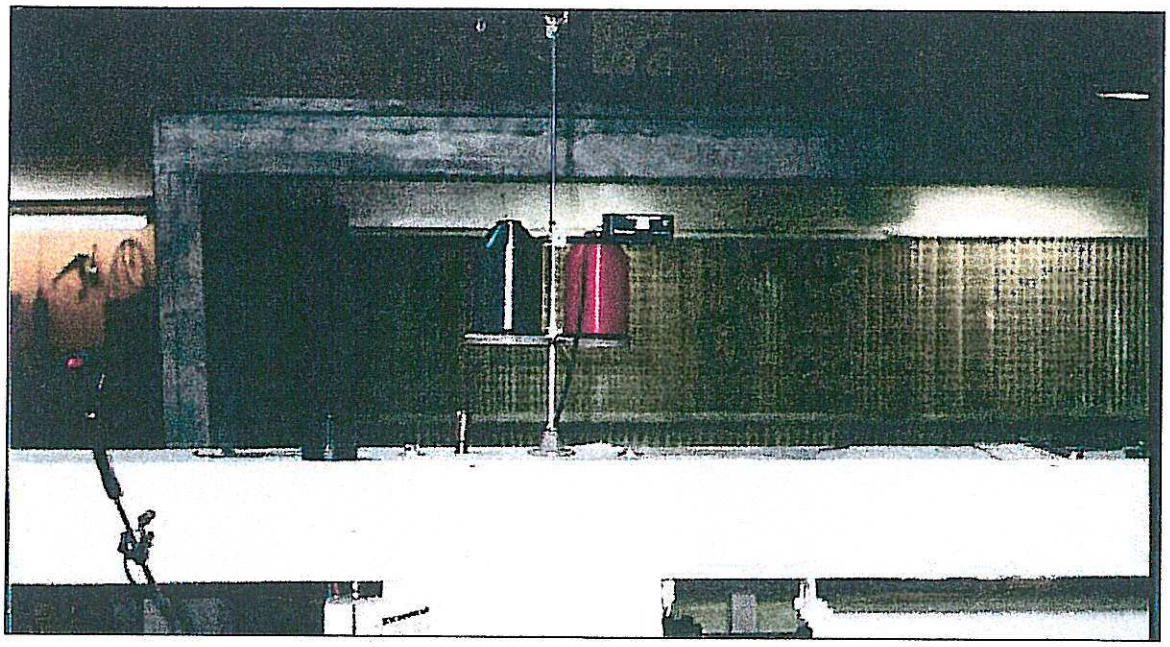

Figure 3.1

3.1 Setting the Frame Size

Determine the finished size of the comforter to be quilted and adjust the Frame Changing Table to the appropriate width by turning the table shafts with the T-handle. See *Figure 3.2.*

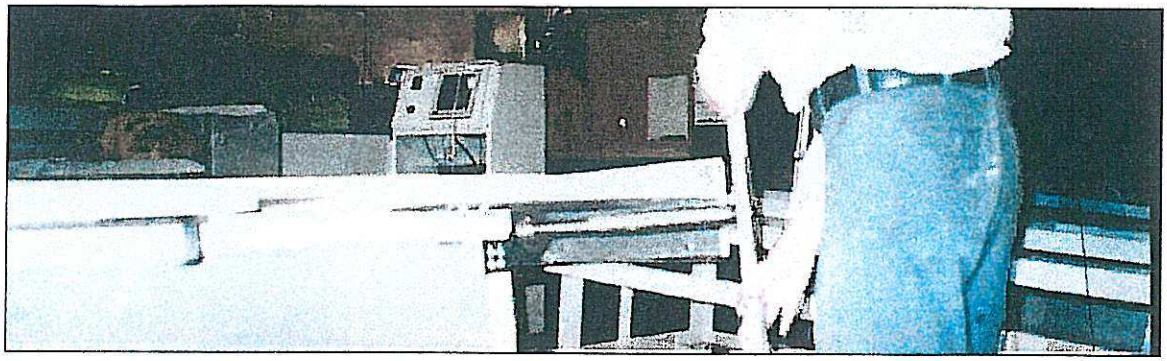

Figure 3.2

Place one of the adjustable frames onto the frame changing table with the entrance corner at the machine side of the table. Adjust the frames to the finished size by loosening the bolts of the locking nuts and any clamps locking together the extrusions, telescoping the aluminum extrusions to the correct size and re-tightening the bolts. See *Figure 3.3.*

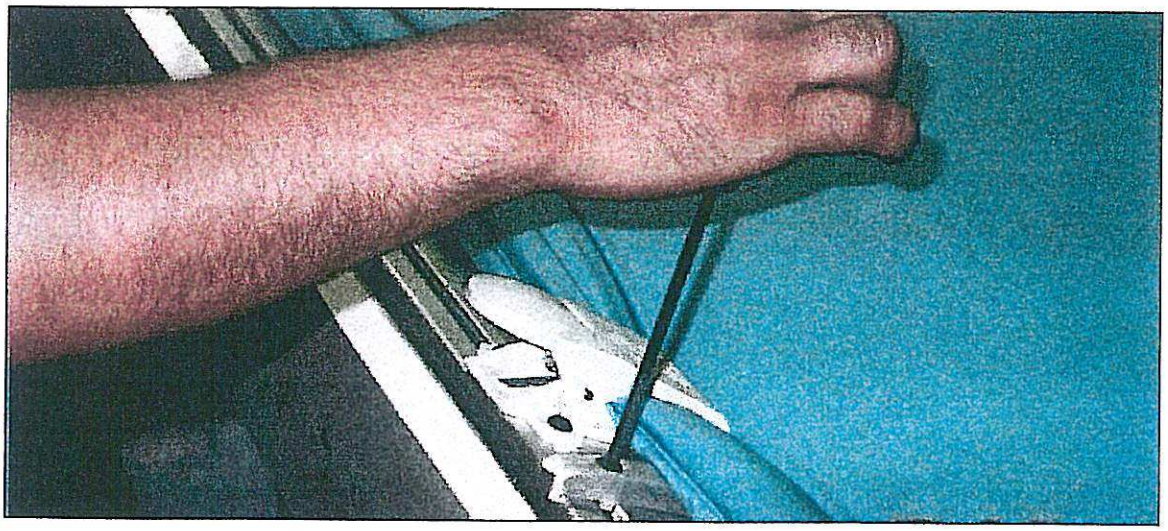

Figure 3.3

3.2 Loading the Frame

Spread a comforter on top of the frame and rack the comfoter into the frame by pulling the edges of the comforter into the clamps.

NOTICE
Make certain the comforter is racked tightly into the frame to avoid any possible damage to the sewing head.

Pull the frame onto the Y-rails of the machine up to the sewing head. Once the frame is on the rails, push it pass the pressure cup to the frame lock pusher. See *Figure 3.4*.

NOTICE
Leading edge of frame has to be a minimum of 6" away from needle before quilting to avoid damage to the machine.

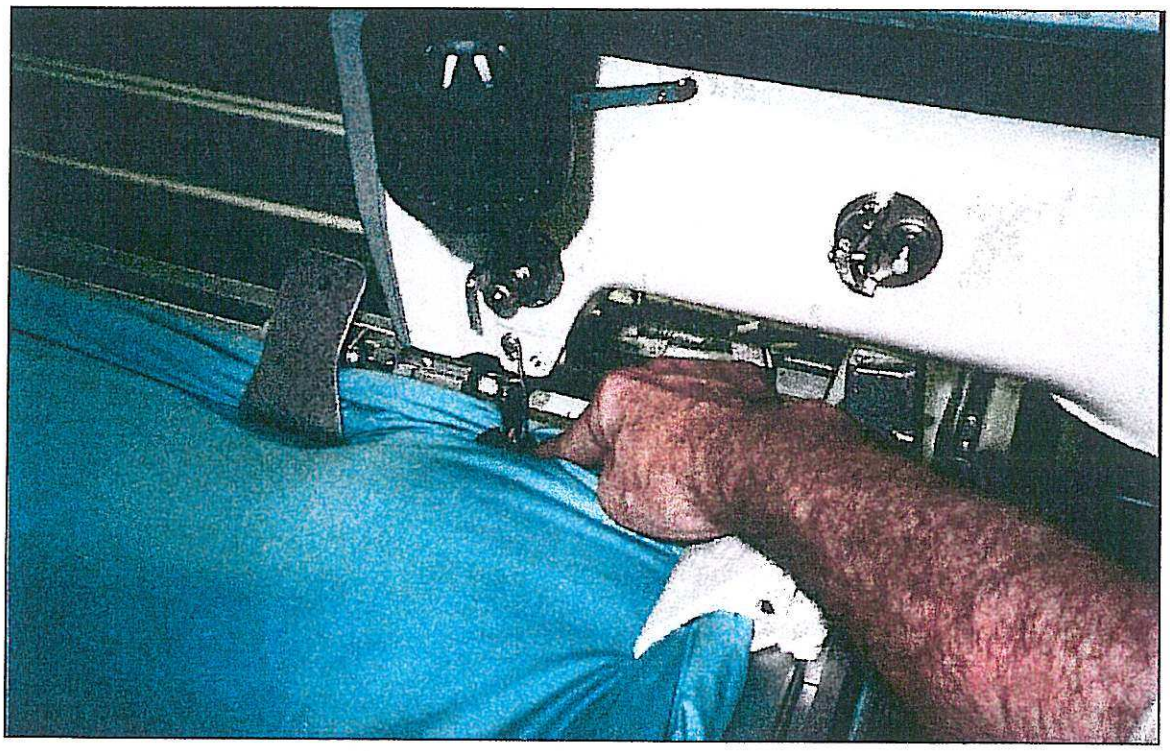

Figure 3.4

SECTION 4: Operation

4.0 System Overview

One person can operate the XL5000 Computer Quilting Machine.

While the machine is quilting, the operator fills the next frame with the new goods to be quilted. When the quilting cycle is completed, the machine stops automatically and the frame lock is released. The completed frame may then be pulled past the needle onto the frame support brackets located on the automatic frame changing table, until the actuating button is depressed to engage the frame changing mechanism of the automatic table. The operator removes the finished frame from the machine and then positions the next frame into quilting position. The new frame is pulled past the needle, and with the touch of the "start" button, the machine commences its operational cycle.

Three- axis brushless digital full servo control automatically adjusts speed of the product movement with the speed of the sewing head to assure exact stitches per inch throughout the sewing pattern. The machine always operates at the highest speeds possible consistent with good quality. It automatically runs faster on straightaways, and slows down to appropriate levels at curves.

A multi-function digital encoder controls needle positioning and thread trimming.

In the event the sewing thread should break, the thread sensor immediately causes the machine to stop. A touch of a button brings the machine to the rethreading position, and touching another button sends the machine back to restart quilting where it left off.

4.1 Location of Control Switches/Buttons

A. Main Power Switch: Located on the front of the computer cabinet. See *Figure 4.1*.

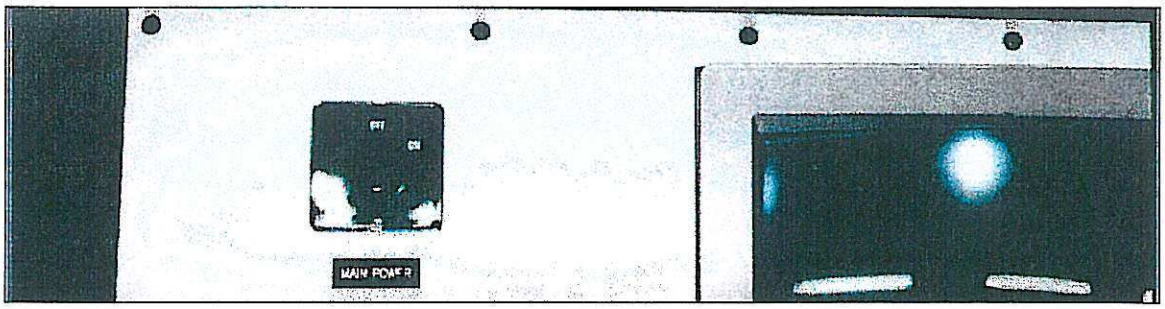

Figure 4.1

B. Start Button: Located on the control panel mounted to the right Y-rail. See *Figure 4.2.* Starts the quilting cycle.

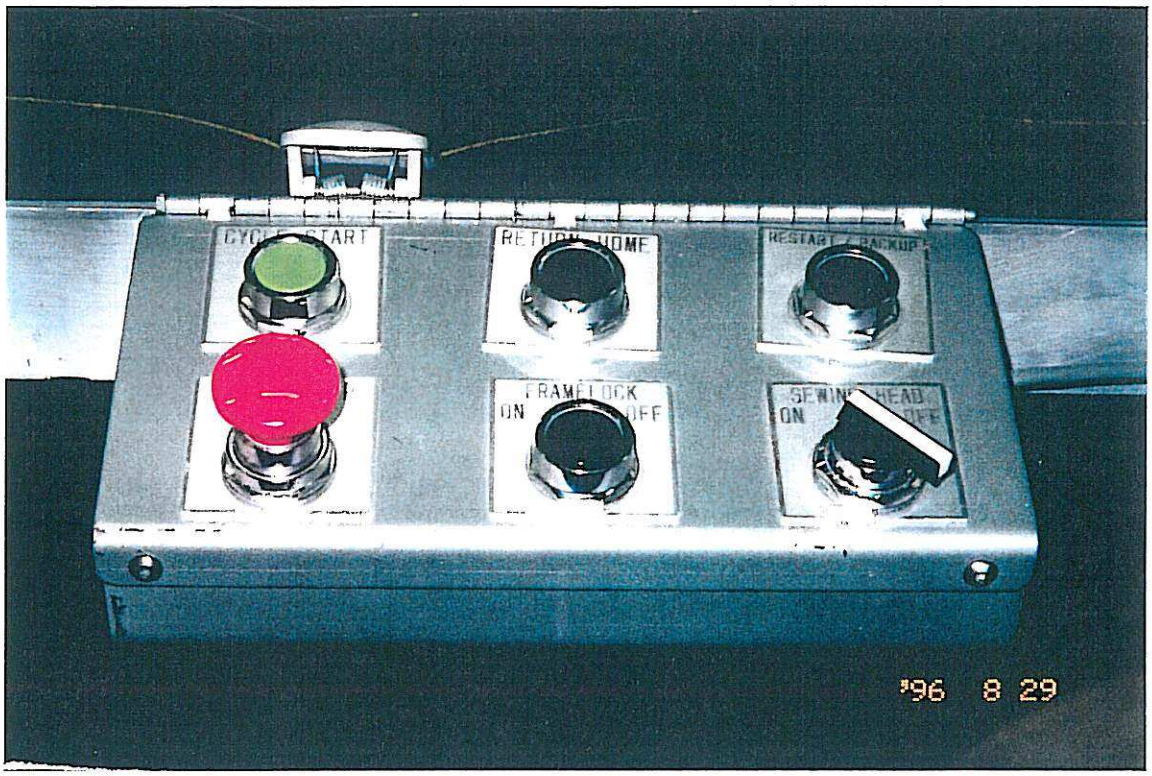

Figure 4.2

C. Stop Button: Located on the control panel. Stops the machine.

D. Home Button: Located on the control panel. Sends the machine home during a thread break recovery routine.

E. Restart Button: Located on the control panel. Restarts the machine after a thread break recovery routine.

F. Frame Lock Button: Located on the control panel. Engages and disengages the frame locks.

G. Sewhead Switch: Located on the control panel. Turns the sewhead "on" and "off".

H. Frame Lock Swithes: Located on the frame puhers of both the right and left Y-rails. See *Figure 4.3.* Signals to the machine the frame is in place.

NOTICE
The machine will not start if the frame lock switch is not tripped.

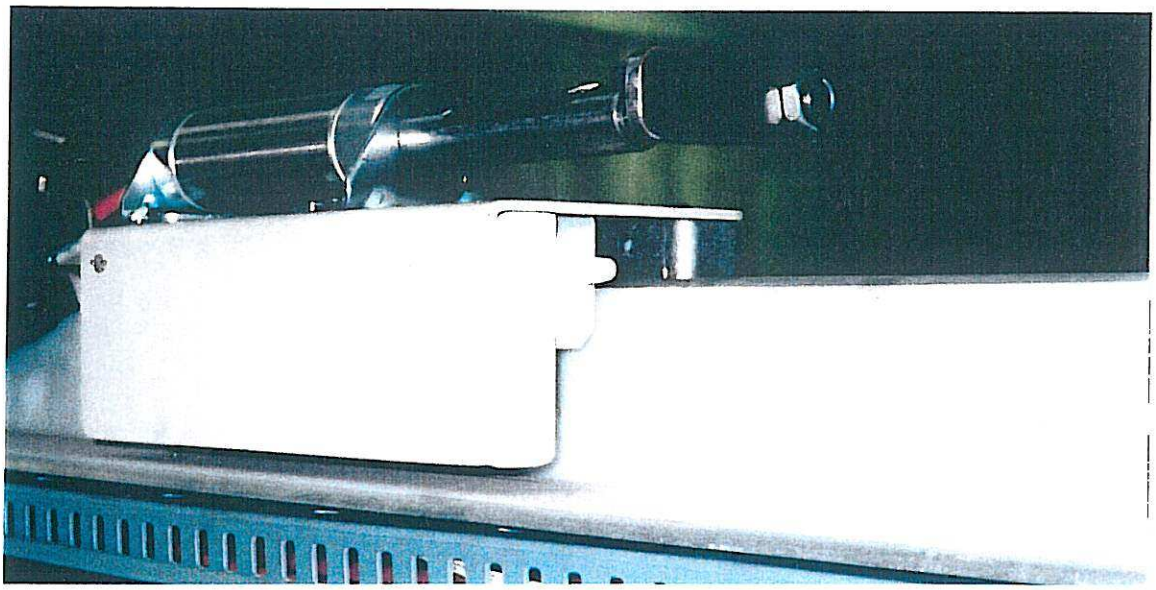

Figure 4.3

I. X-axis Overtravel Limits: Located on the middle X-axis drive behind the sewhead. See *Figure 4.4*. Prevents the frame from crashing into the sewhead when moving in the X direction.

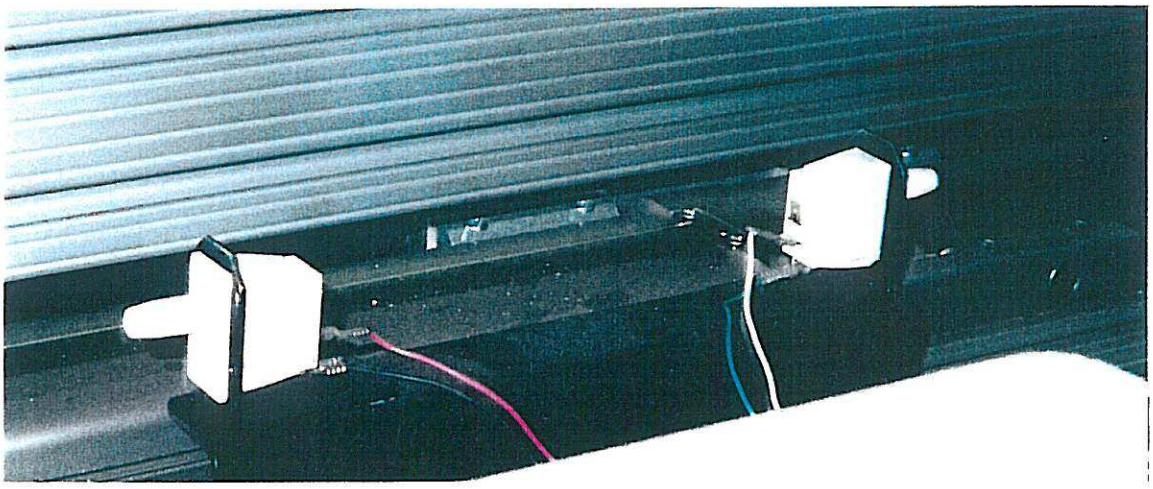

Figure 4.4

J. Y-axis Overtravel Limits: Located at the front and back of the right Y-axis drive. See *Figure 4.5.* Prevents the frame from crashing into the sewhead when moving in the Y direction.

> CAUTION
> The back Y-axis overtravel will need to be adjusted as the size of the frame is changed in the Y direction. Failure to do so may result in damage to the sewhead.

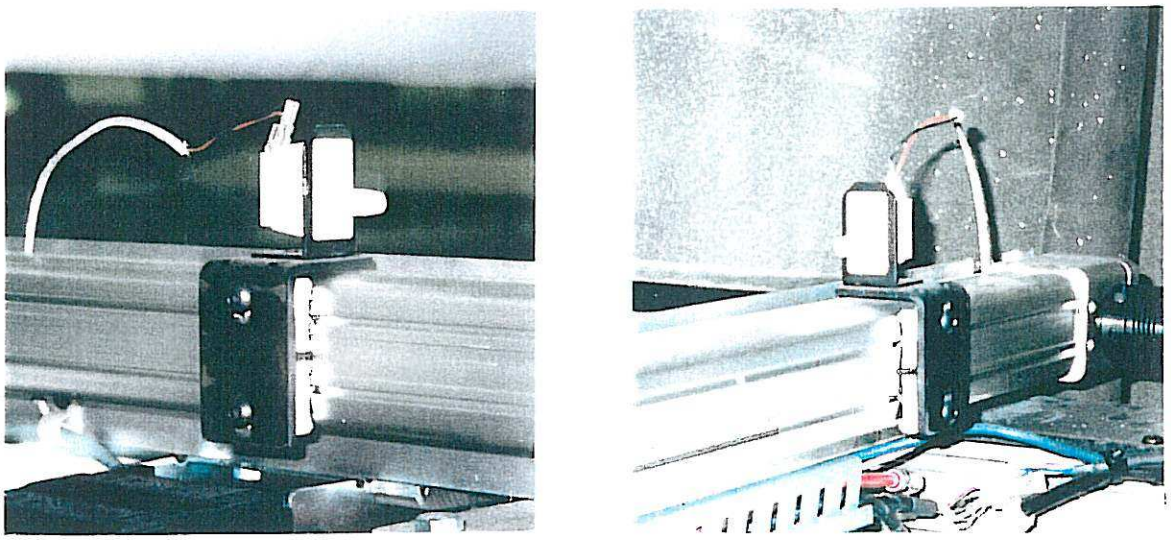

Figure 4.5

K. Light: Located on the front of the bridge, above the sewhead. See *Figure 4.6.* Provides light to operating personnel when working on the sewhead.

Figure 4.6

4.2 Operator Menu

A. Change Bobbin: Indicates that the bobbin needs to be changed.

B. Speed: Adjusts the operating speed of the machine.

C. Home: Enters a home screen for jogging the machine or setting the home position of a pattern.

D. Scale: Scales the pattern to size based on the area of the product to be quilted.

E. Load Pattern: Loads a pattern file into the machine from the operator's directory.

F. Main Menu: Returns the system to the main menu.

4.3 Operating Instructions

A. Turn on the "Main power" switch. The main menu appears. See *Figure 4.7*.

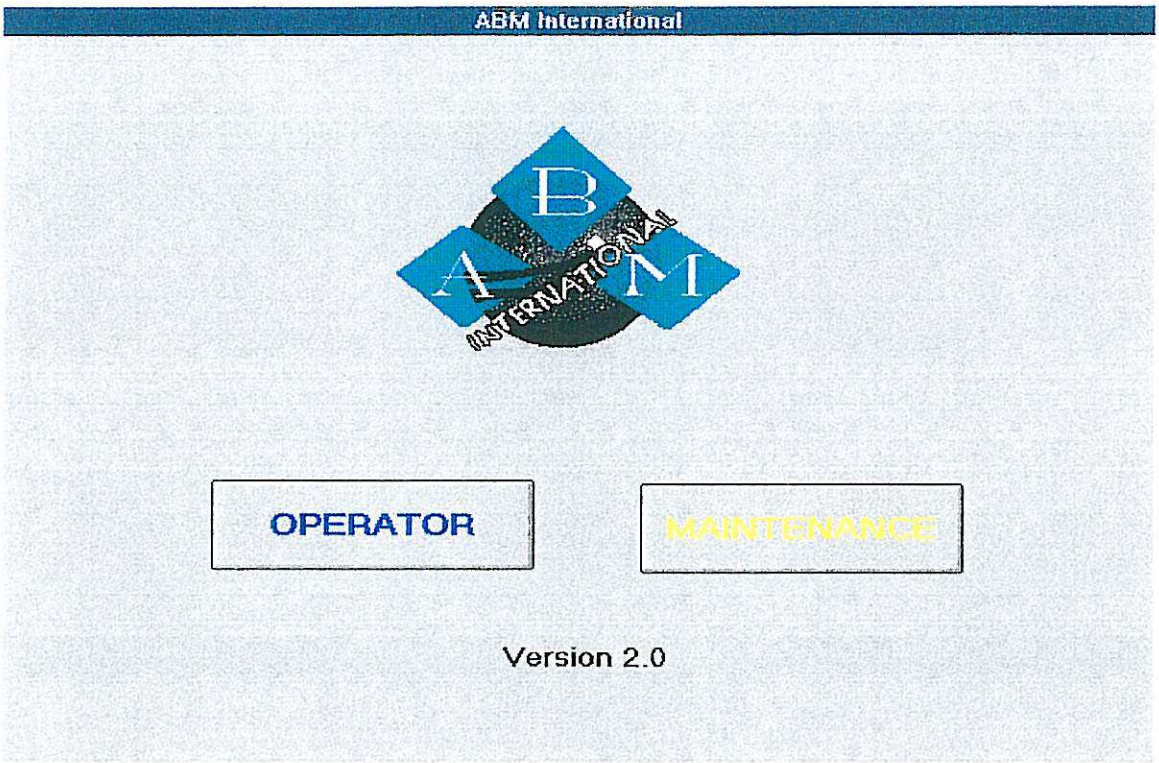

Figure 4.7

B. Press the "Operator" function key on the Color touch screen and the operator screen appears. See *Figure 4.8.*

NOTICE
Hold the button until the button appears to lift on the screen.

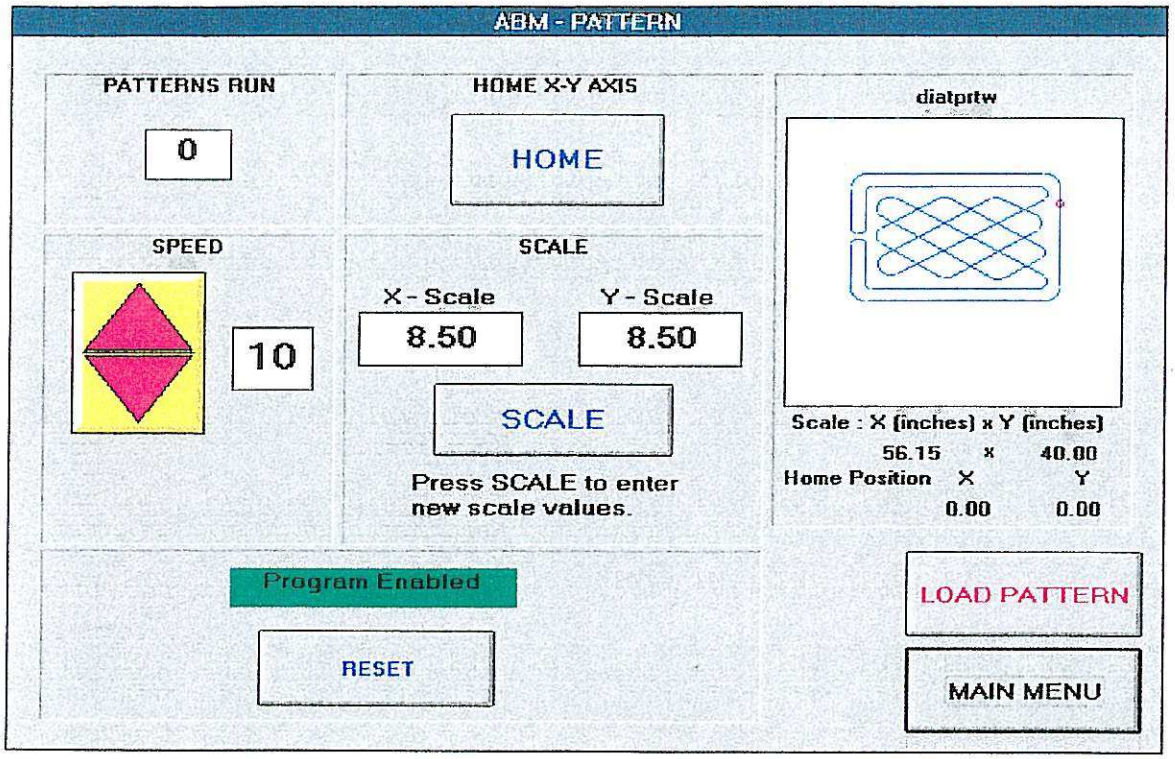

Figure 4.8

C. To load a pattern, press "Load Pattern" key to see available patterns. Choose a pattern by touching the pattern box of the pattern which you want to run. See *Figure 4.9.*

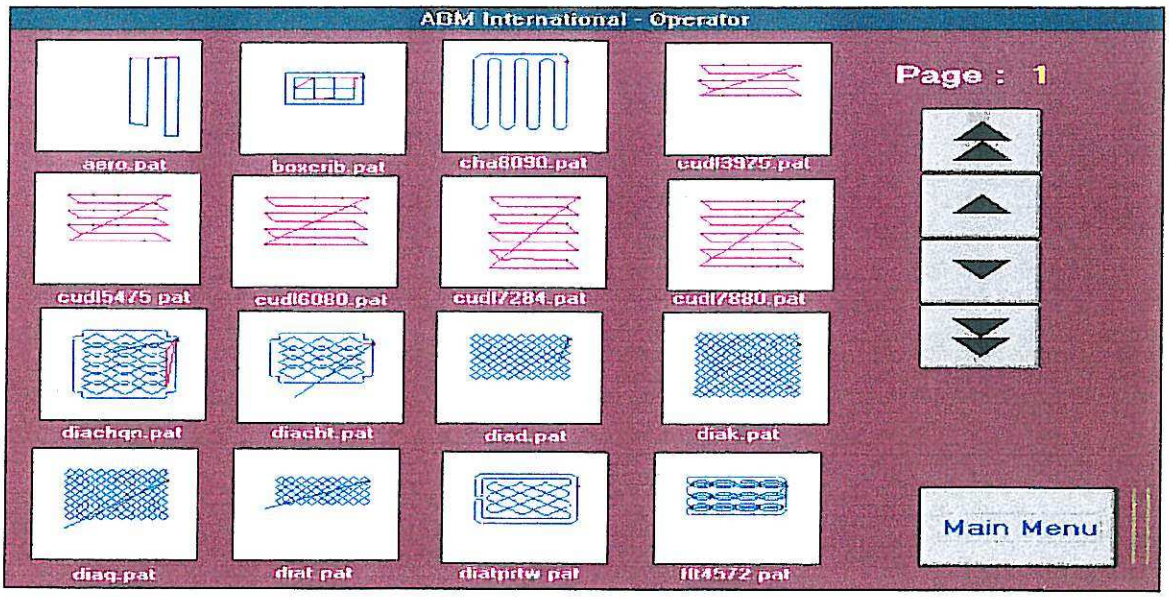

Figure 4.9

D. Scale the pattern to desired size (scaling factor multiplied by drawing size). To scale, press the "Scale" key and the number box of the axis to be scaled (X-scale or Y-scale). A keyboard screen will appear. See *Figure 4.10*. Now enter the desired factors and press the "Download" key. The new sewing dimensions will appear under the pattern box.

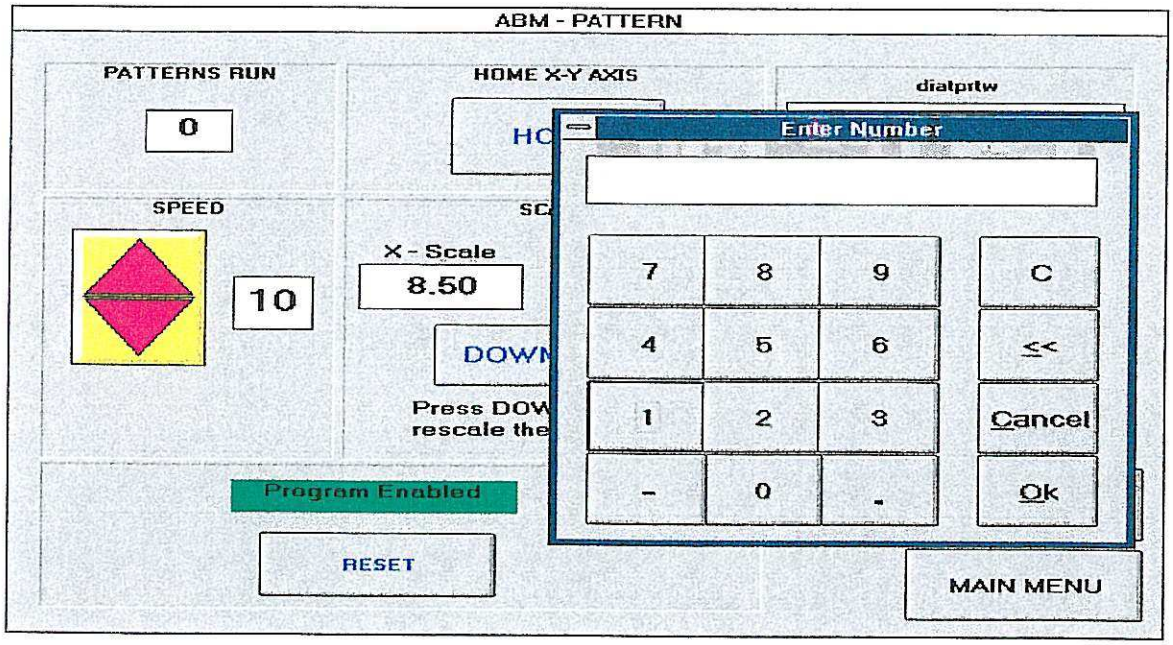

Figure 4.10

E. The home position point (0,0) is based on the original pattern design. To set home, press the "Home" key. A jog screen will appear. See *Figure 4.11*. Choose a jogging speed by pressing either the "Slow", "Medium" or "Fast" keys. Then press the "Arrow" of the direction to jog and move the machine to the desired location. Press the "Home" key to set the machine's position at 0, 0.

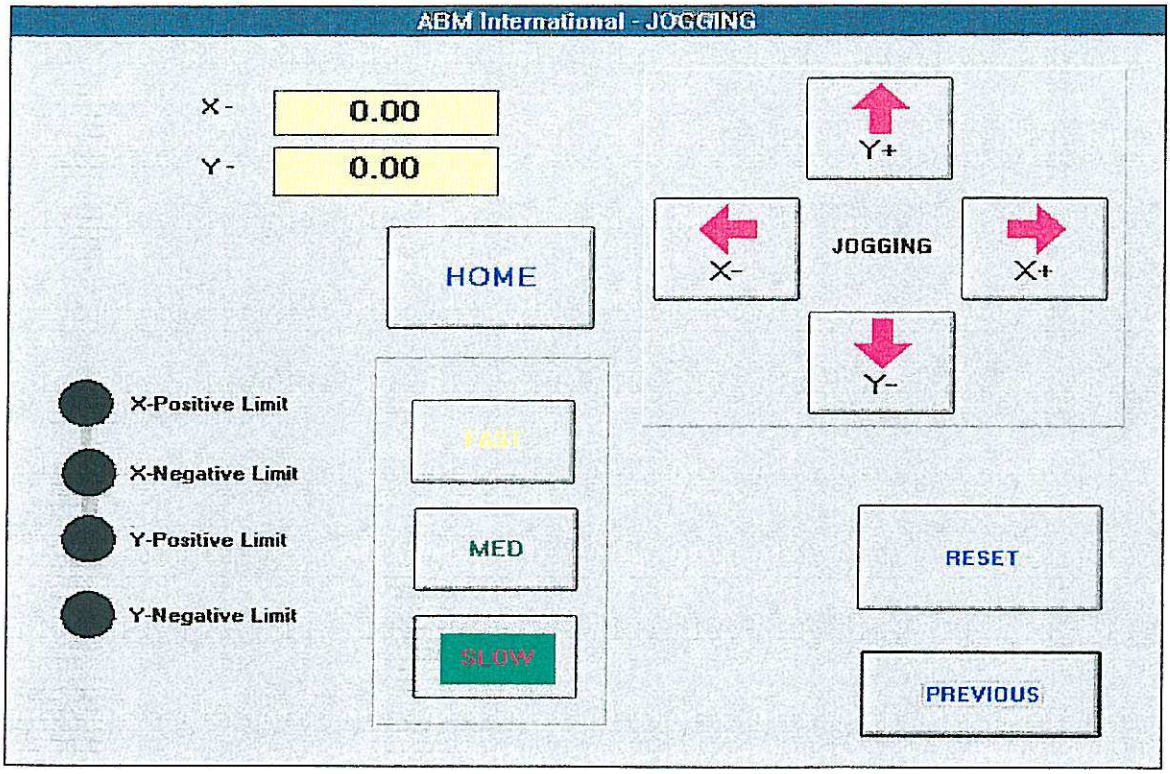

Figure 4.11

F. The operator may choose a speed level between1-10 which is a percentage of the maximum speed set in the maintenance menu. To adjust the speed, press the appropriate "Arrow" key.

G. After positioning the frame into the machine, lock the frame into the Y-rails by depressing the "Frame Lock" button.

H. For testing to ensure that the pattern fits the frame, flip the "Sewhead" switch to the "Off" position. This will shut off the sewhead, put the machine into slow speed and position the needle out of the material for a safe test run.

CAUTION

Damage may result if the needle does not clear the material. Do not run the machine. You must reset the needle positioner in the maintenance menu.

Now press the "Start" button and observe the machine run the pattern. Observe the machine carefully and press the "Stop" button if you see any misalignment or malfunctions.

Once it is determined the pattern will fit the frame, the machine is ready for normal operation.

Normal Operation

A. Flip the "Sewhead" switch to the "On" position and press the "Start" button. The words in the mode box will change to "Pattern running"and the color of the box to blue. See *Figure 4.12*.

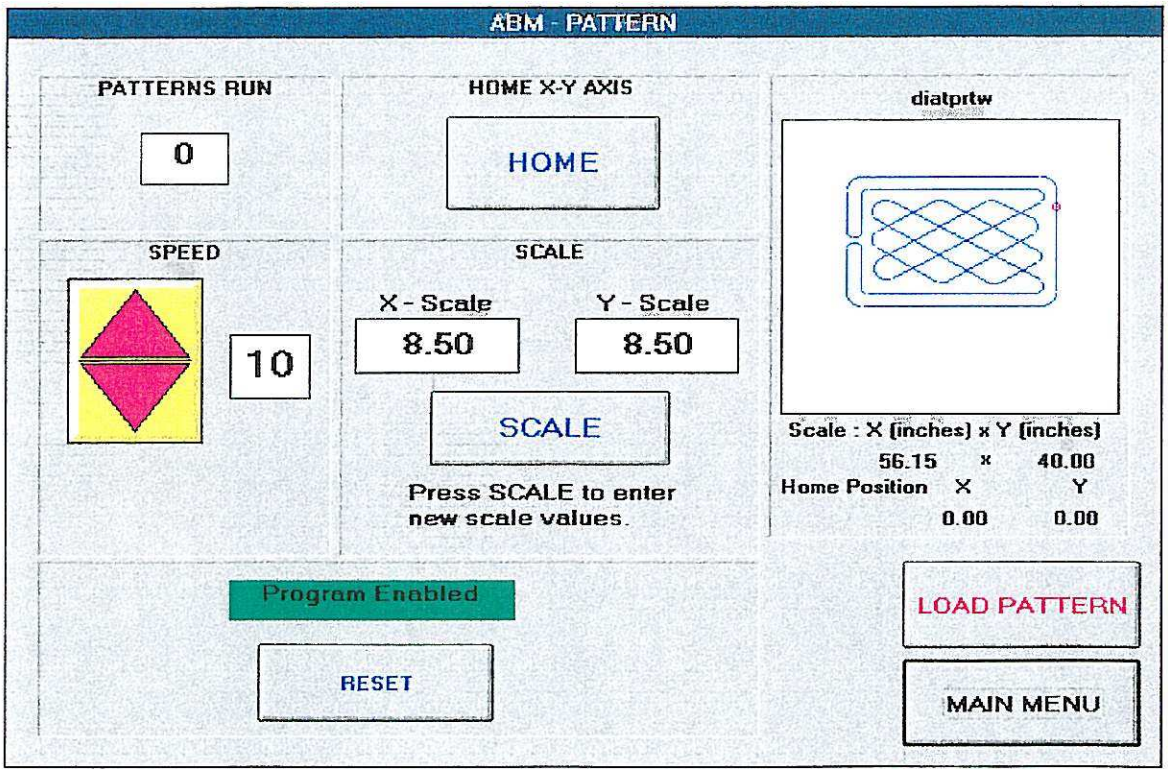

Figure 4.12

B. While the machine is quilting, the operator should clamp the next product into the second adjustable frame on the frame changing table. The operator will finish racking a comforter in approximately the same time as the machine's quilting cycle.

C. Back-Tacking will occur at the start and finish of all sewing patterns.

D. When the machine completes the quilting pattern it will stop automatically. The needle will be raised to its highest position by a high speed needle positioner system which assures that the needle is always in the "up" position when not sewing. This prevents any damage to the material or the sew head.

An under bed trimmer combined with servo control ensure that top and bottom threads are trimmed accurately whenever the sewing cycle stops at the end of a tack or pattern.

E. Pull the frame with the quilted comforter from the machine onto the flaps of the table and pull the second frame from the table onto the Y-rails as described in the Preliminary Set-up. See *Figure 4.13.*

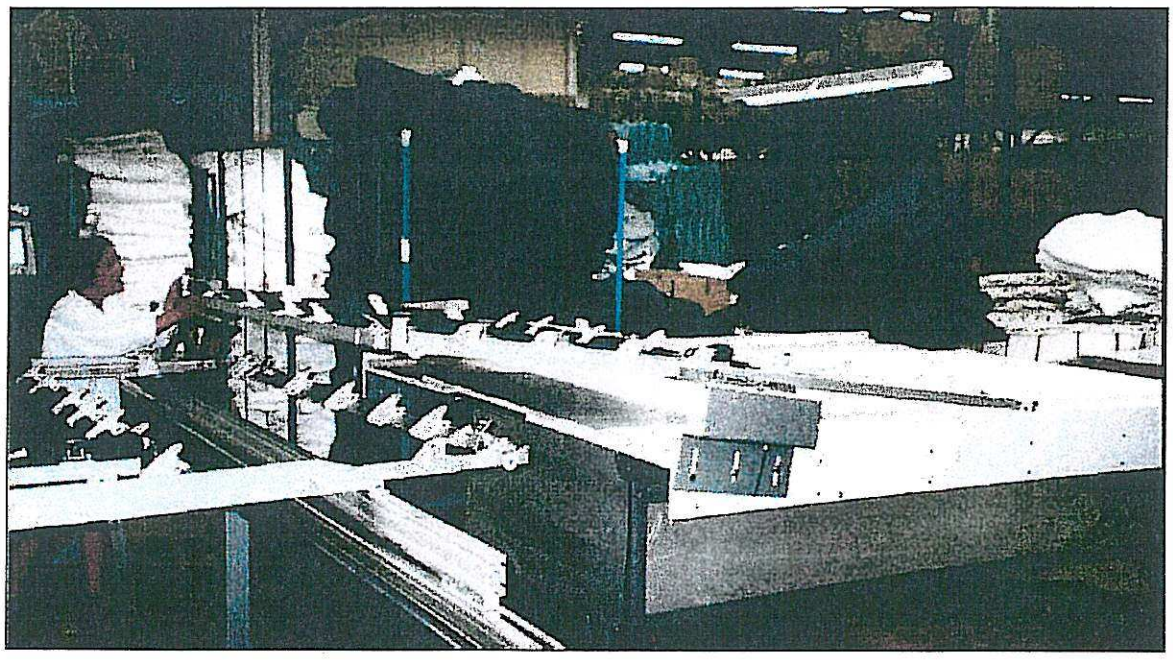

Figure 4.13

5.3 Wiring Diagrams

The following pages contain the wiring digrams for all of the components making up the operating system of the XL5000. These are point to point drawings and are intended to be very easy to follow for troubleshooting problems.

CAUTION
Always ensure to use all safety precautions when troubleshooting electrical prolems within the machine.

ABM International
XL 5000 *Eagle*
Computer Quilter

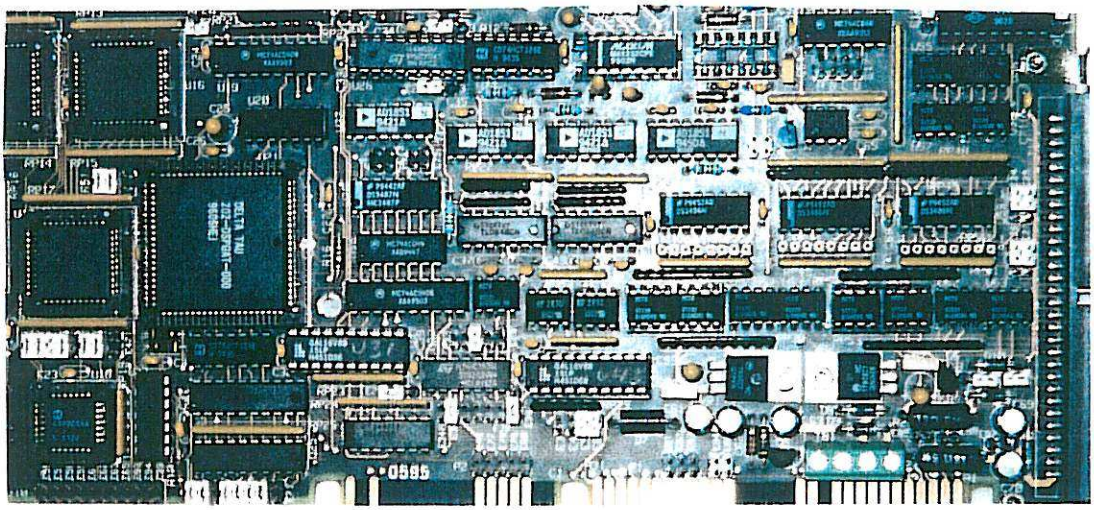

Wiring Diagrams

Thread Break Recovery

A. In the event that a thread break should occur or the machine run out of thread during a quilting cycle, a solid state thread sensing device will automatically stop the machine.

B. Flip the "Sewhead" switch to the "Off" position and the needle will position "up".

C. Press the "Home" button and the machine will move without sewing to the 0,0 co-ordinates.

D. Rethread the sewing head and make any necessary sewing adjustments.

E. Press the "Re-start" button and the machine will return to the place where it broke thread.

NOTICE

If necessary, the machine can back up further by pressing the "Re-start" button a second time. If the machine travels too far, press the "Start" button and allow the machine to move forward slowly through the pattern. Press the "Stop" button when the machine is 1" shy of the broken stitches. This will allow for an overlapping of the stitches so there will be no run-backs.

F. Press the "Start" button and the machine will begin sewing from where the pattern stopped.

Machine Shutdown

A. Press the "Main menu" key to return to the main menu.

B. Turn off the "Main power" switch.

4.4 Maintenance Menu

The Maintenance (Technician) Menu provides more advanced options and is only to be available for use by technicians or floor managers. This menu is password protected and can be accessed only if the password entered matches the password set-up in the operating system.

NOTICE
The password will be preset by ABM prior to shipment.

To access the maintenance menu, use the following instructions.

A. Press the "Maintenance" key on the main menu screen. A message screen will appear with a box for entering the password. See *Figure 4.14*.

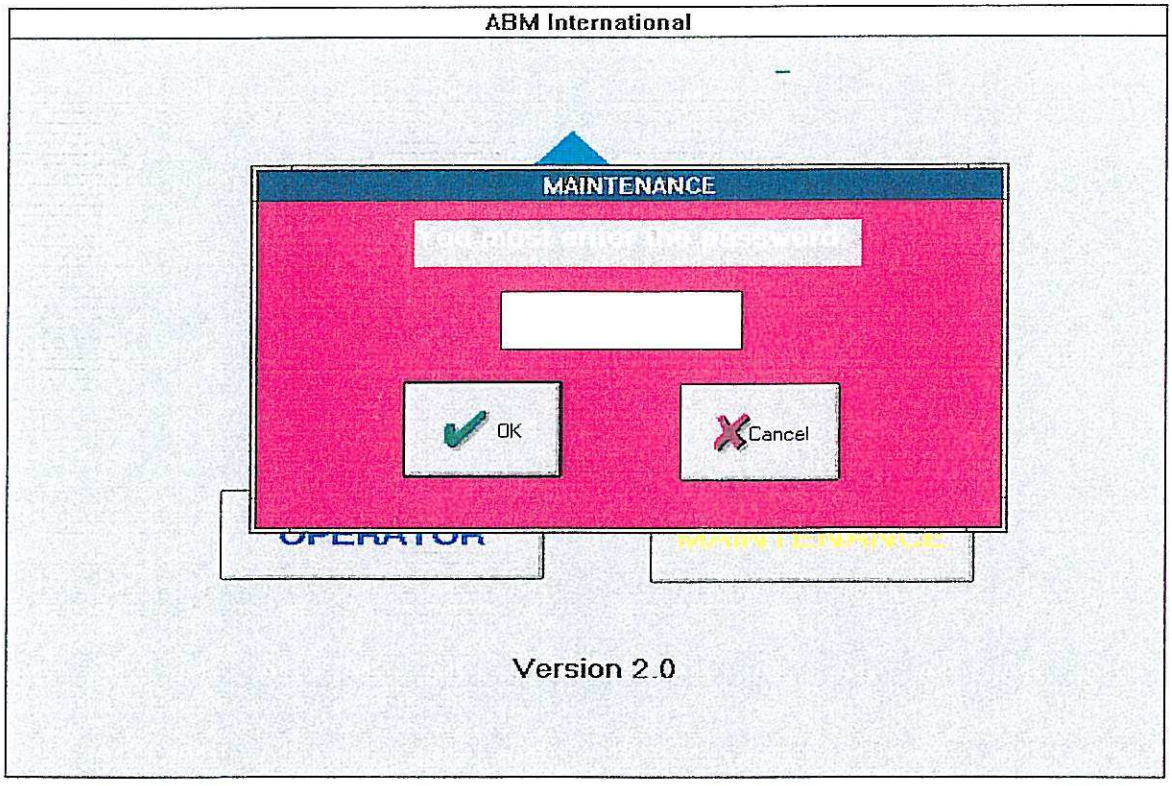

Figure 4.14

B. Press the white "Password" box. A keyboard screen will appear. See *Figure 4.15*. Now enter the 4-character password and press the "O.K." key. A message screen will appear again. See *Figure 4.14*.

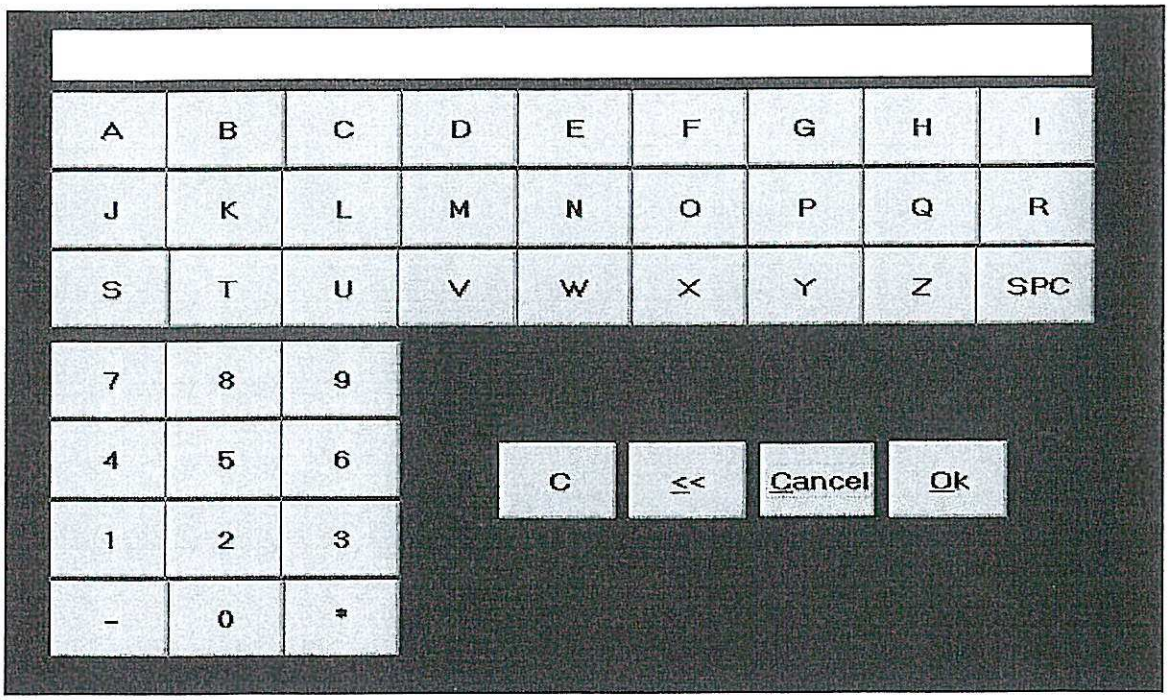

Figure 4.15

C. Press the "O.K." key and the parameter screen will appear. See *Figure 4.16.*

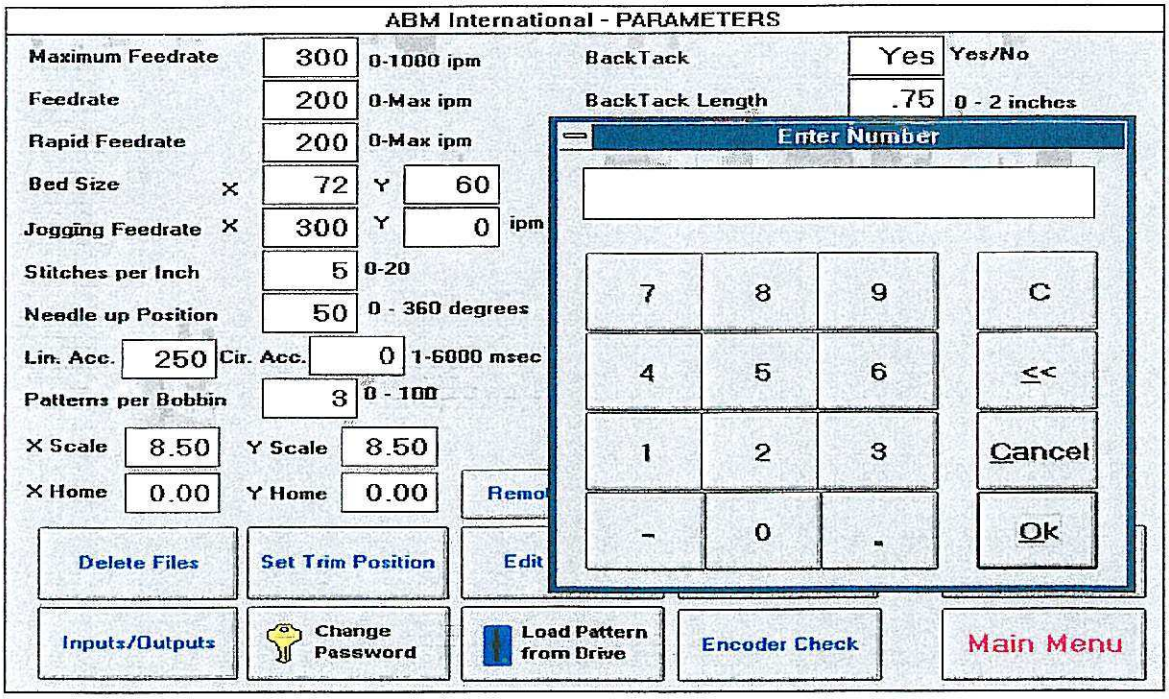

Figure 4.16

This screen displays the machine parameters and is where all machine adjustments are made.

4.5 System Parameters

Operating Parameters

A. Maximum Feedrate: The highest recommended linear speed at which the machine is to be operated. The computer will not operate the machine at speeds faster than this setting. All Feedrates are referred to in IPM (inches per minute). The higher the number, the faster the machine is capable of operating.

B. Feedrate: The linear speed at which the machine will operate. *Sewing speed = Feedrate x Stitches per Inch.* The higher the number, the faster the machine will operate.

CAUTION

Never exceed the sewhead manufacturer's recommended speed for the type of material being sewn as excessive speeds may cause the sewhead to prematurely wear out.

C. Rapid Feedrate: The linear No-sew speed at which the machine moves going home and between tacks while the macine is sewing a loaded pattern. The higher the number, the faster the machine will move between tacks.

D. Bed Size: The frame size of the pattern to be quilted, stated in inches.

E. Jogging Feedrate: The linear speed at which the machine will move while using the "Jog" keys. The higher the number, the faster the machine will jog.

F. Stitches Per Inch: The number of stitches to be sewn per inch of travel. The higher the number, the more stitches per inch.

G. Needle up Position: The number of degrees the needle will rise after reaching the trim position to ensure the machine always moves with the needle postioned "up".

H. Feedrate Acceleration: The acceleration characteristics of the machine as it travels in corners and circles. The higher the number, the slower the machine will travel. Adjust according to smoothness of pattern to be quilted.

I. Patterns per Bobbin: The number of pieces that can be quilted before the bobbin runs out. Once this is set, the "Bobbin warning box" on the operator screen will flash every time the set number is reached.

J. Scale: Scales the pattern loaded in the operator screen based on the size product to be quilted. The higher the number, the larger the pattern to be sewn.

K. Backtack: Enables the backtacking capability of the machine. Yes is "on"; No is "off".

L. Backtack length: The actual length of the backtack, stated in inches. The higher the number, the longer the backtack.

M. Backtack Stitches per inch: The number of stitches per inch in the backtack.

N. Number Of Backtacks: The number of backtacks to be sewn at the end of a pattern or tack. For every number entered, the machine will go back and forth once. *Example: Enter 2. The machine goes back and forth twice.*

O. Thread Cut Delay: The delay between the time the needle positions up and the cutter returns, stated in milliseconds. The higher the number, the longer the delay.

NOTICE

This parameter is used mainly for hot wire cuters. Settings should be: Hot wire cutter = 750. Conventional cutter = 250.

P. No-sew Feedrate: The linear No-sew speed at which the machine will move with the "Sewhead " switch flipped to the "Off" position. The lower the number, the slower the machine will move.

CAUTION

This function is used primarily for testing to ensure the scaled pattern runs without hitting the frame. To avoid possible damage, do not set this speed too high.

Q. Revs per Oil Injector: Number of revolutions the sewhead will turn per pulse of the oil pump. The higher the number, the less often a pulse of oil will be sent to the sewhead.

R. Thread Cut Enable: Enables the thread cutting capabilities of the machine. Yes is "on". No is "off".

S. Thread Break delay: How often the computer communicates with the sensor circuit fo thread breaks, stated in milliseconds. The higher the number, the less sensitive the thread sensor is.

> NOTICE
> The setting for this parameter can vary from 50-3000 depending on the type of thread being used. When using "ULTRALUX" set at 1000.

T. Thread Sensor Enable: Enables the thread break detection capabilities of the machine. Yes is "on". No is "off".

Other Functions

A. Default Parameters: Resets the parameters to the original ABM factory settings.

B. Delete Files: Deletes patterns from the directory in the operator's load pattern screen.

C. Inputs/Outputs: Allows testing of the machine inputs and computer outputs.

D. Set Trim Position: Sets the needle up position for automatic postioning.

E. Change Password: Allows authorized personnel to change the existing password for entering the maintenance menu.

F. Edit Pattern: Allows the G-code of the pattern loaded to be edited.

G. Load Pattern from Drive: Loads patterns into the operator's directory from either the hard drive or a disk.

H. Encoder Check: Allows the individual servo motors to be turned "on" and "off". Also, runs the sewhead at pre-set speeds and sets the encoder scale.

I. Reset: Resets the computer control system.

J. Save Parameters: Saves whatever parameter changes have been made to the pattern loaded for quilting on the operator screen.

K. Main Menu: Returns the system to the main menu.

L. Remote Communication: Enables the modem in the computer operating system to communicate with a host computer.

Recommended Parameters

Parameter	Default Setting
Maximum Feedrate	1000 IPM
Feedrate	720 IPM
Rapid Feedrate	1000 IPM
Bed Size	Sewing area of machine. ie: 84"x96"
Jogging Feedrate	600
Stitches Per Inch	6
Needle up Position	55
Feedrate Acceleration	250
Patterns per Bobbin	5
Scale	*
Backtack	Yes
Bactack Length	.75
Backtack Stitches per inch	10
Number of Backtacks	2
Thread Cut Delay	750
No-sew Feedrate	350
Revs per Oil Injector	5000
Thread Cut Enable	Yes
Thread Break Delay	1000
Thread Sensor Enable	Yes

* Dependant of size of G-code pattern.

4.6 Maintenance Instructions

Change system parameters

A. Press the box of the parameter to be changed. A number pad screen will appear. See *Figure 4.17*.

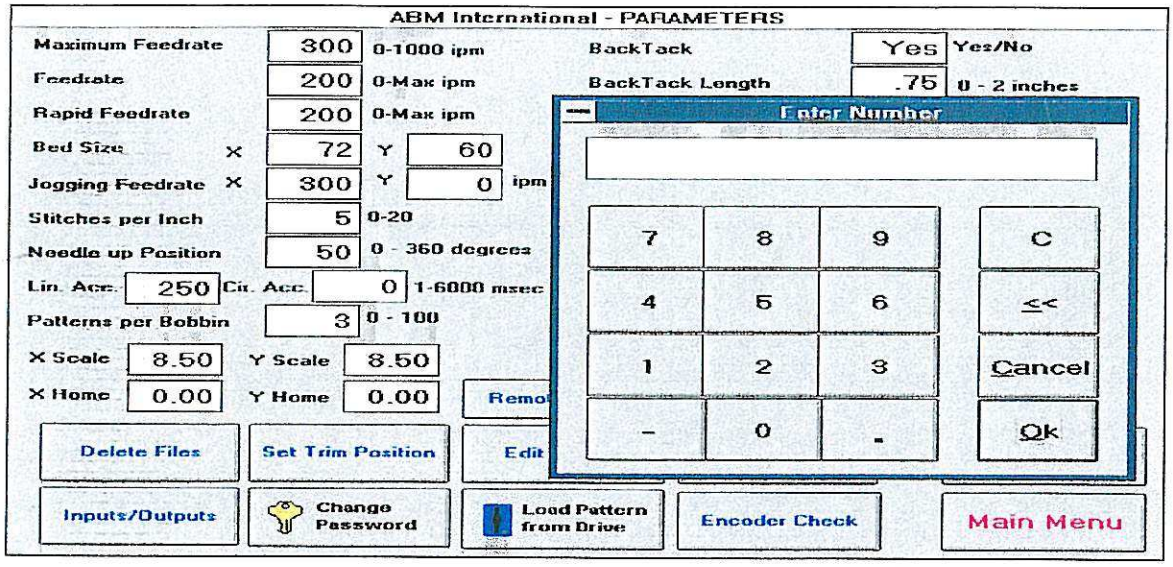

Figure 4.17

B. Enter the desired number and press the "O.K." key.

C. Press the "Save parameters" key.

Delete Files

A. Press the "Delete Files" key and a delete files screen will appear. See *Figure 4.18.*

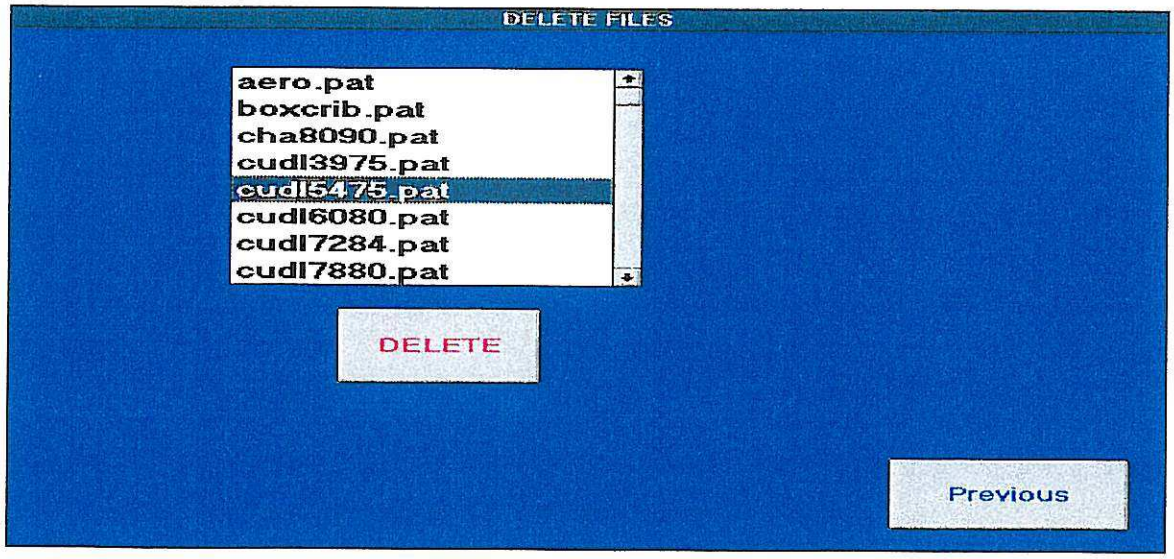

Figure 4.18

B. Use the "Arrow" keys to highlight the file to be deleted and press the "Delete" key.

C. Press the "Previous screen" key to return to the parameter screen.

Test Inputs/Outputs

A. Press the "Inputs/Outputs" key and an input/output screen will appear. See *Figure 4.19.*

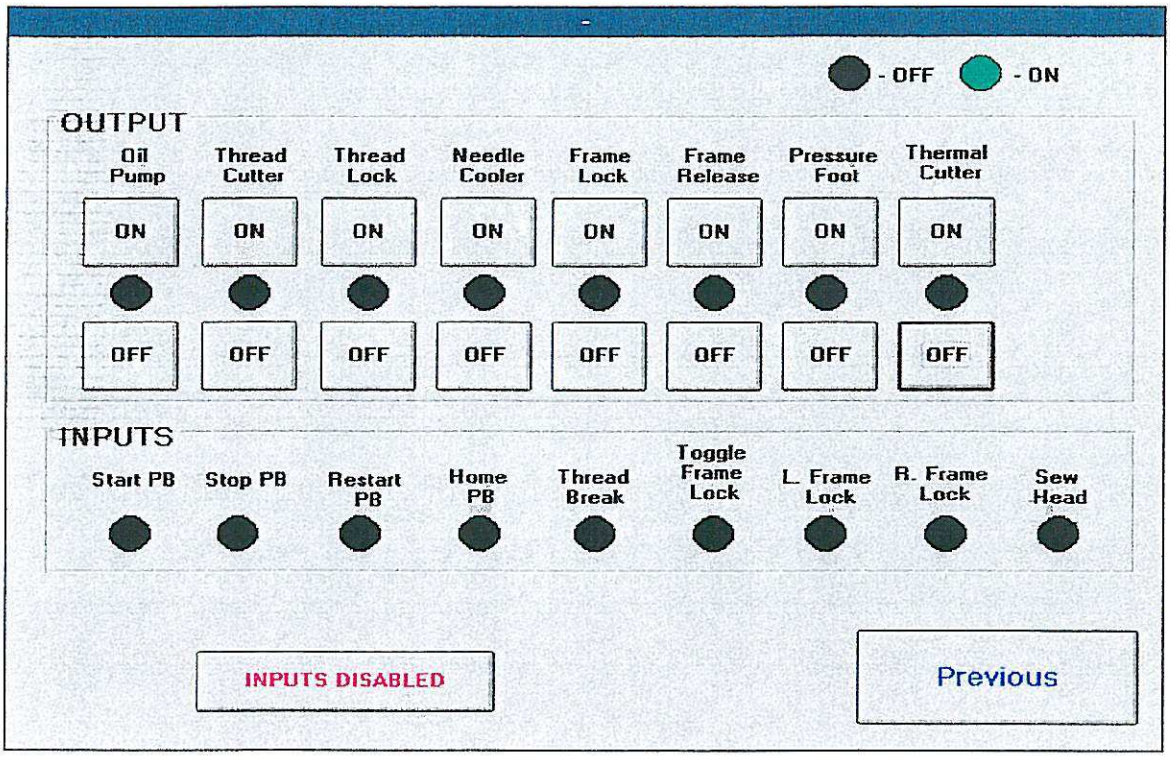

Figure 4.19

B. To test an input, press the pushbutton or switch on the machine of the input to be tested. If the control system is working, the corresponding light will activate (turn green) on the "Input/Output" screen. *Example: Press the "Start" button on the operator panel and the "Start" input will light up.*

CAUTION

The inputs are automatically disabled when you enter this screen. They can be manually enabled by pressing the "Inputs Disabled". To avoid damage to the machine, always test the inputs when they are DISABLED.

C. To test an output, press the "On" key above the light of the output to be tested. If the control system is working, the light will activate (turn green) to signify the valve is operating. To deactivate an output, press the "Off" key below the light of the output. *Example: Press the "On" key for the "Frame Lock" output. The light will activate and the Frame Locks on the machine will engage. Press the "Off" key, the light will deactivate and the Frame Locks will release.*

D. Press the "Previous" key to return to the parameter screen.

Set Trim Position

A. Press the "Set trim position" key and a set trim position screen will appear. See *Figure 4.20.*

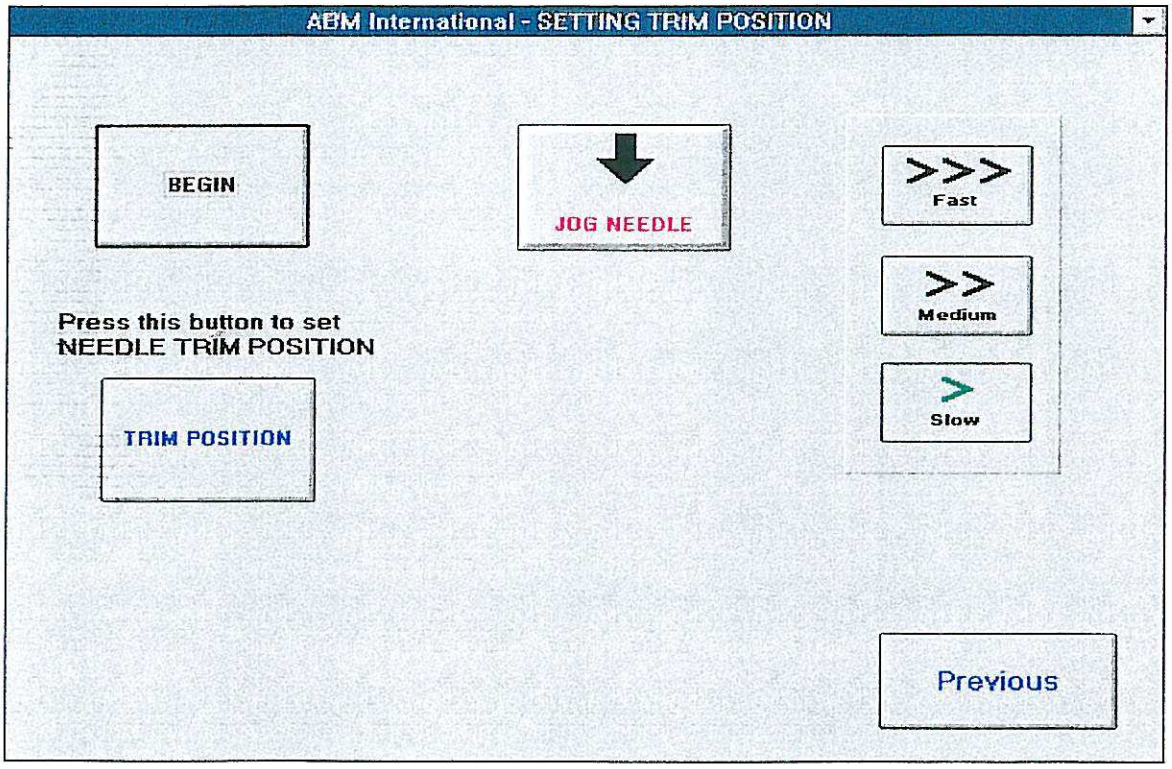

Figure 4.20

B. Press the "Begin" key and the needle will position to the encoder marker pulse.

C. Press the desired jog speed key,either "Slow", "Medium" or "Fast", to choose a speed for jogging the sewhead.

D. Press the "Jog needle" key and jog the sewhead until the hook is at approximately 6:00 o'clock. The needle should be on the way up with the take- up finger at the bottom of the slot.

E. Press the "Trim Position" key and the machine will rotate to the needle-up position. The number of degrees above trim position will be entered on the parameter screen automatically.

NOTICE

The machine will not enter the degrees setting if the "Sewhead" switch on the operator panel is in the "off" position.

F. To test the needle positioner, flip the "Sewhead" switch on the operator panel "on" and "off". The machine should rotate the needle to the cut position, activate the thread trimmer, rotate to the needle up position and finish cutting.

CAUTION

An incorrect setting will allow the machine to move with the needle in the down position, resulting in product and sewing head damage.

G. Press the "Previous" key to return to the parameter screen.

Change Password

A. Press the "Change Password" key a change password box will appear. See *Figure 4.21*.

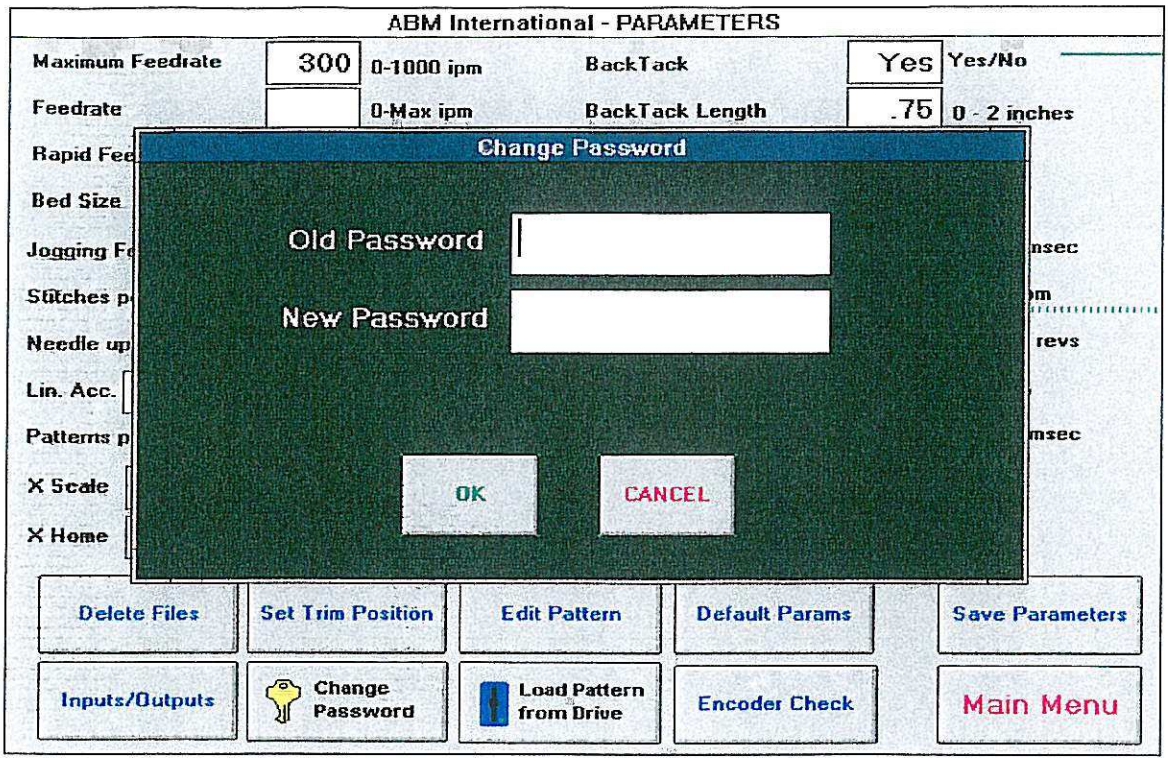

Figure 4.21

B. Press the white "New Password" box. A keyboard screen will appear. Enter a new 4-character password and press the "O.K." key. The change password box will appear again.

C. Press the "O.K." key. The computer will ask to verify the password.

D. Again, press the white "New Password" box and the keyboard screen will appear. Re-enter the new 4-character password and press the "O.K." The change password box will appear again.

E. Press the "O.K." key.

Caution
Write the password down and keep it in a safe place. Without it, the maintenance menu can not be accessed.

Edit Pattern

A. Press "Edit Pattern" key and an edit screen will appear. See *Figure 4.22.*

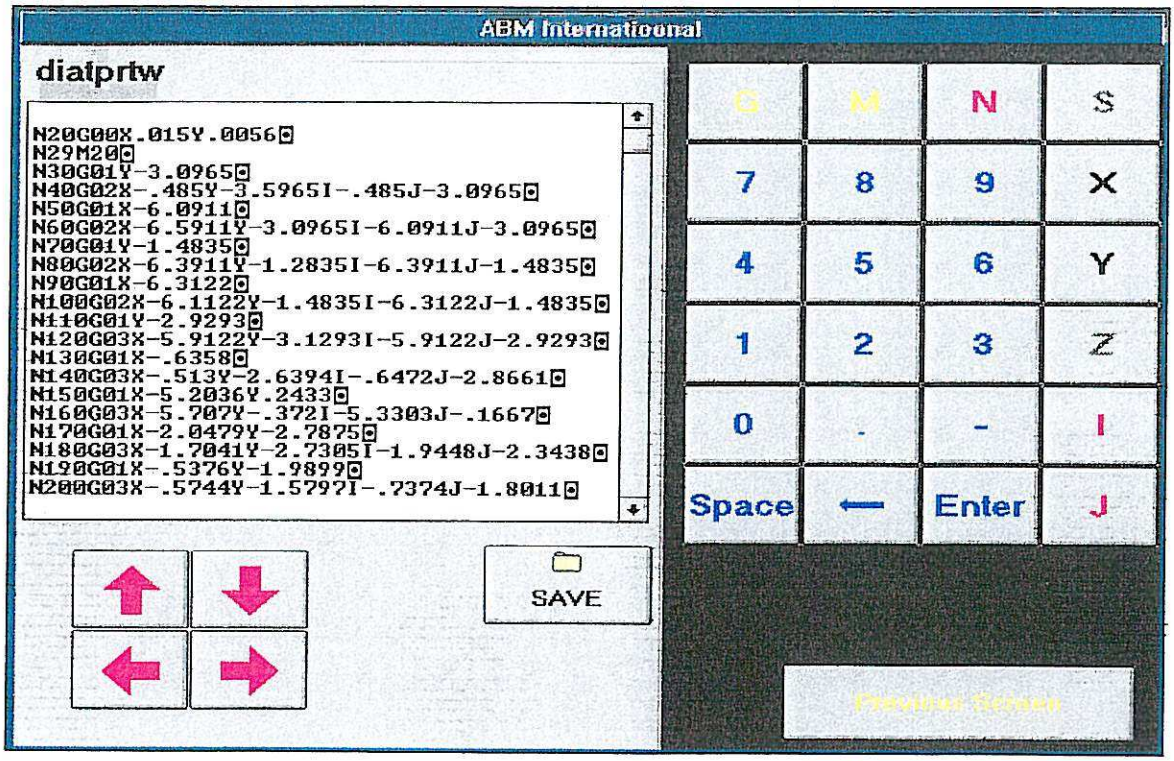

Figure 4.22

B. The G-code of the pattern loaded into the operating system will appear on the left side of the screen ready for editing. To edit a different pattern, Press the "Open" key and the new pattern G-code will appear.

C. The edit screen includes a touchpad to manually enter any changes that need to be made to the pattern's G-code. Make desired changes to the pattern (refer to the **Code Entry** section of the manual).

D. Press the "Save" key to save any changes.

E. Press the "Previous screen" key to return to the parameter screen.

Load Pattern From Drive

A. Press the "Load pattern from drive" key and a load pattern screen will appear. See *Figure 4.23*.

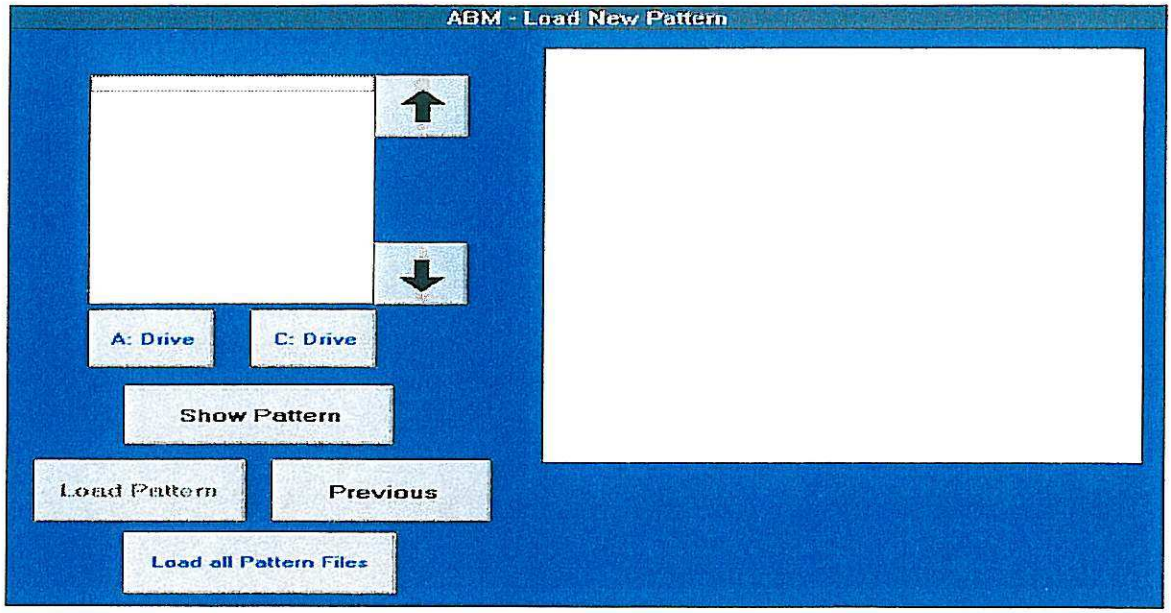

Figure 4.23

B. To load from the A: drive, place a 3.5 floppy diskette with PAT. files in the disk drive of the computer located inside the computer cabinet.

C. To load all patterns, press the "Load all patterns" key and a load all patterns screen will appear. See *Figure 4.24*. Press the "Go" key and the computer will load all patterns from the disk to the hard drive. A message will appear indicating the loading is complete. Press the "End" key.

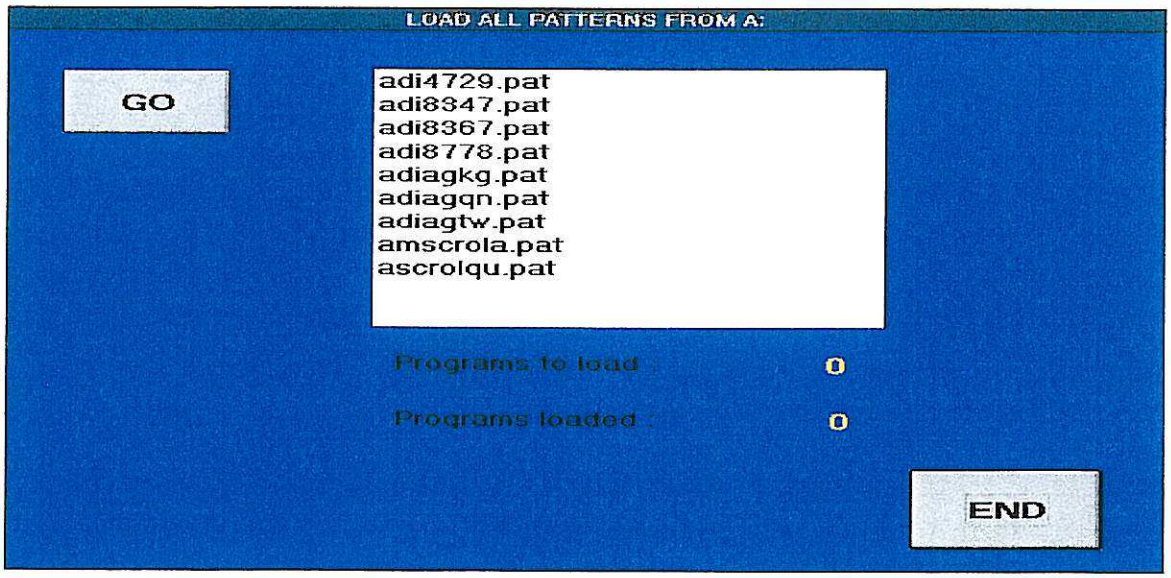

Figure 4.24

D. To load patterns individually, highlight the pattern of your choice and press the "Load pattern".

E. To load patterns from the C: drive, follow step **D**, as patterns from the C: drive must be loaded individually.

F. To view a pattern from the disk, highlight the desired pattern and press the "Show pattern" key. After several seconds, the pattern will draw in the white box located in the upper left hand corner of the screen.

G. Press the "Previous screen" key to return to the parameter screen.

Encoder Check

A. Press the "Encoder check" key and the encoder check screen will appear. See *Figure 4.24.*

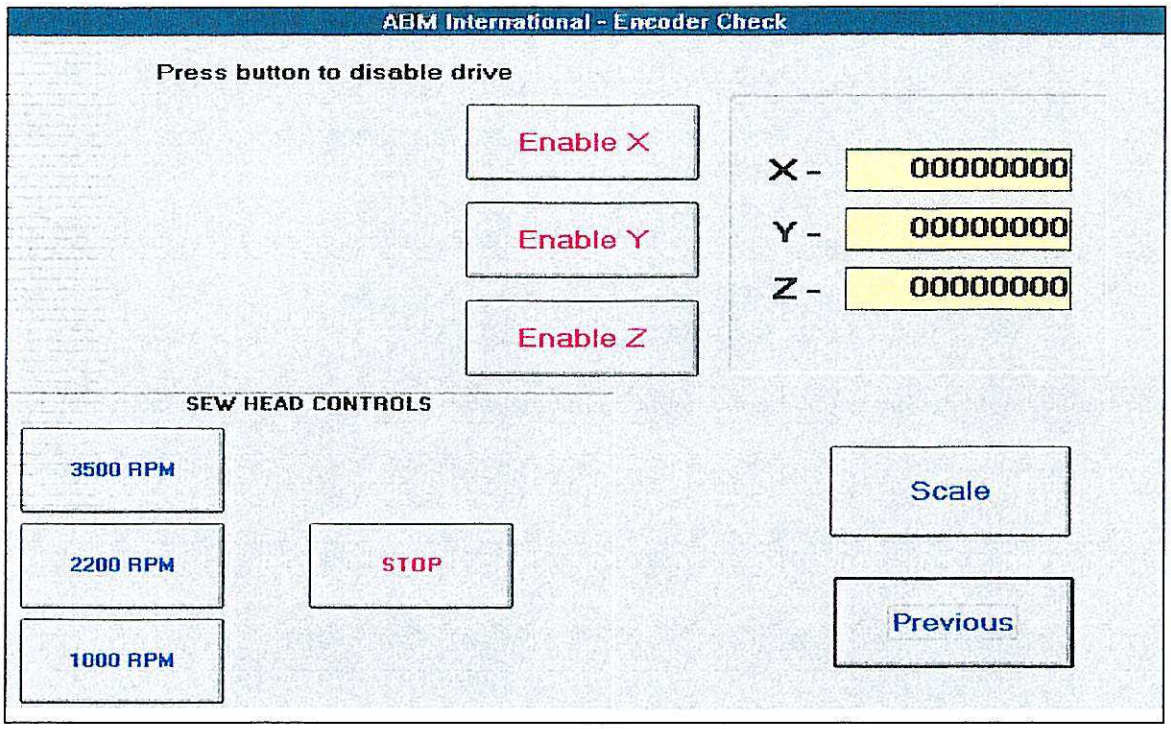

Figure 4.24

B. To turn "off" an individual servo motor, press either the "Enable X", "Enable Y" or "Enable Z" key. The key will then read "Kill" and that servo motor will be disabled.

C. To turn the servo motor back "on", press the appropriate "Kill" key. The key will then read "Enable _" and the servo motor will be enabled.

NOTICE

The encoder readout boxes show the encoder position of the X-axis, Y-axis and Z-axis servo motors.

D. To run the sewhead at pre-set speeds, press either the "1000", "2500" or "3500" key. The sewhead will run at the speed pressed.

E. To stop the sewhead, press the "Stop" key.

F. To scale the X and Y-axis encoder, press the "Scale" key. A keyboard screen will appear. Enter the 4-character password and press the "O.K." key. A scale screen will appear. See *Figure 4.25.*

NOTICE

The password will preset by ABM prior to shipment. This password is is different from the password to enter the maintenance menu.

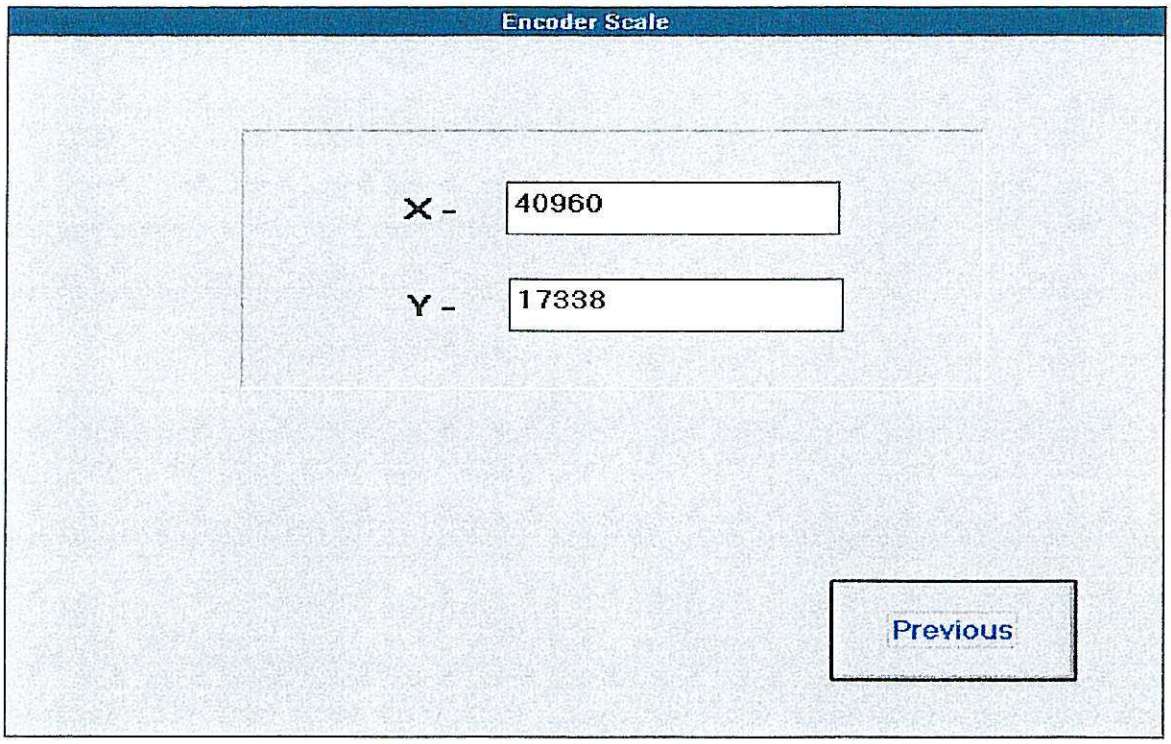

Figure 4.25

G. Press the white box of the scale to be adjusted. A keypad will appear. Enter the new value and press the "O.K." key.

H. Press the "Previous" key to return to the encoder screen.

I. Press the "Previous" key to return to the parameter screen.

Remote Communication

A. Press the "Remote Comm" key. The computer system will then upload the modem software and a "Laplink" icon will appear. See *Figure 4.26.*

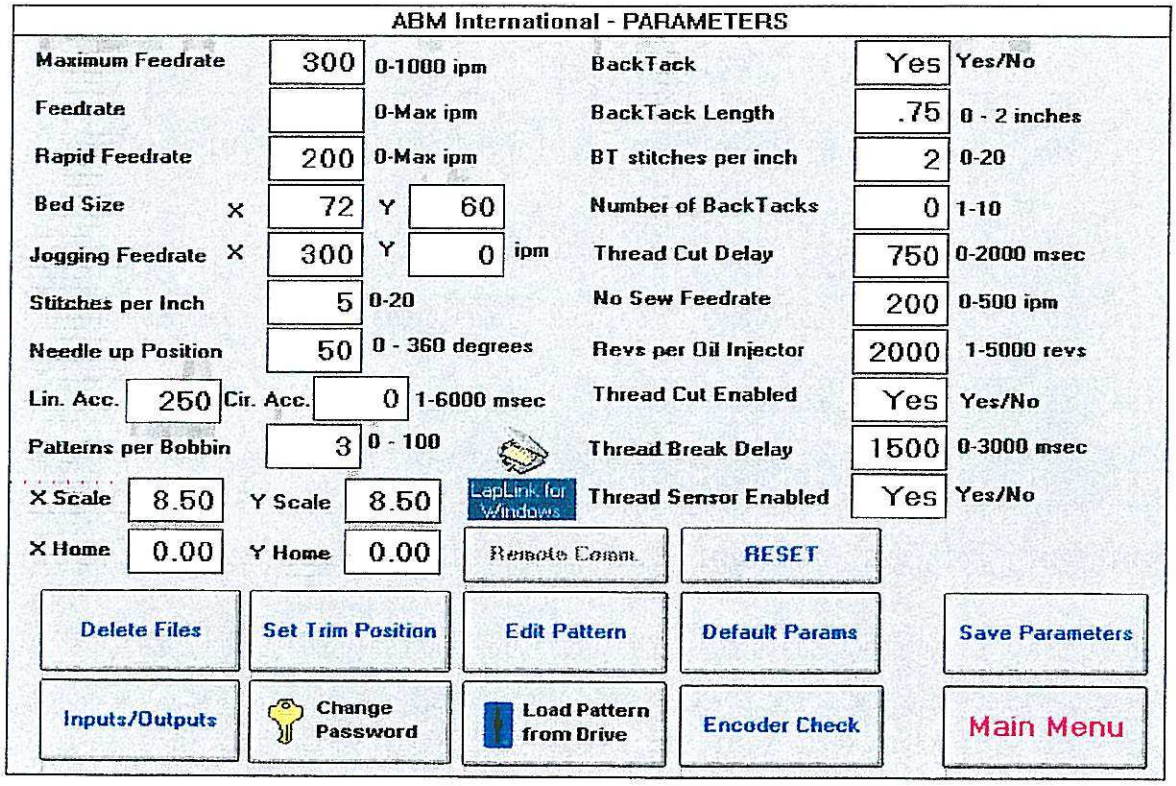

Figure 4.26

B. Press the "Laplink" icon and follow the Laplink onscreen instructions.

NOTICE
For assistance call, ABM International, 847-581-0011.

SECTION 5: Maintenance

5.1 Maintenance

Although the XL5000 Eagle Computer Quilter rarely requires servicing if the maintenance outline is followed, there may be occasions when the equipment suffers a failure. In the unlikely event of this happening, follow the outline included in this section to best determine the cause of the problem.

> NOTICE
> For assistance, call the ABM International Technical Department at 847-581-0011.

5.2 Maintenance Schedule

To be done after 1 week break-in period:

1. Check all nuts/bolts/screws for tightness.
2. Check for loose electrical connections.
3. Check all belts for proper tension.
4. Check the oiling system for proper lubrication.

To be done daily:

1. Wipe off the machine and clear the bridge of any clutter.
2. Check the sewhead for any wear. (Check manufacturer's manual)
3. Check the hook for any wear. (Check manufacturer's manual)
3. Check the frames to ensure all screws are tight.
4. Visually inspect the machine for any loose connections.

To be done weekly:

1. Clean the sewhead and remove any thread wrapped around the take-up.
2. Clean the hook area and remove any thread wrapped the hook.
3. Visually inspect the Frame Changing Table for wear.
4. Check air hoses for leaks.

To be done monthly:

1. Check all belts for proper tension.
2. Grease the pillow blocks.
3. Check all couplings and pulleys for wear or looseness.
4. Check for loose electrical connections.
5. Check all nuts/bolts/screws for tightness.
6. Check the oil reservoir level.

5.3 Sewhead Manual

The following pages consist of the manufacturer's manual for the sewhead used in building the XL 5000 Computer Quilter. ABM has gone to great lengths to ensure the sewhead operates in the same manner as it did when shipped from the manufacturer.

NOTICE
ABM inventories all sewhead parts which can be ordered by calling 847-581-0011 or faxing 847-581-0029.

PFAFF®

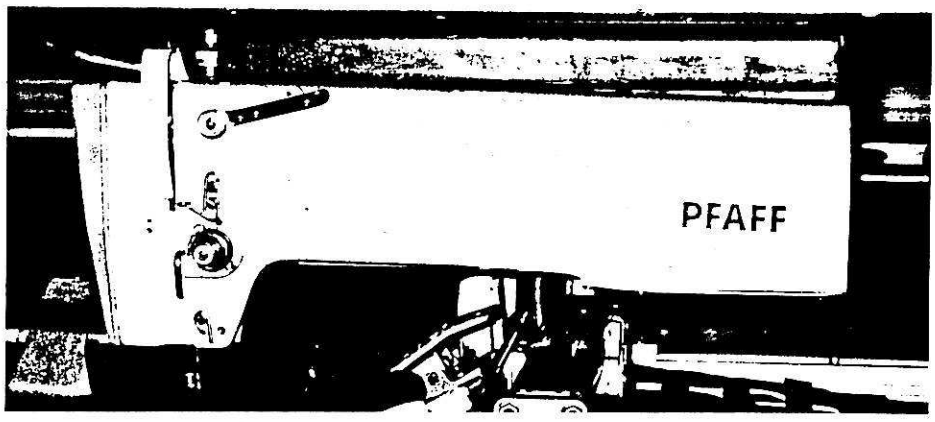

Service manual

Zur besonderen Beachtung

● Die ersten 2 Wochen Maschine nur mit 3/4 ihrer Höchstgeschwindigkeit laufen lassen.

● Zur Nähgutentnahme Fadenhebel immer in die höchste Stellung bringen (bei Maschine mit -900/. . erfolgt Fadenhebelhochposition automatisch).

● Um Störungen zu vermeiden, Maschine regelmäßig reinigen (Seite 22) und Ölvorschriften (Seite 5) beachten.

Sicherheits-Hinweise

● Die Maschine darf nur ihrer Bestimmung gemäß verwendet werden. Beim Umbau in andere Ausführungen sind alle gültigen Schutzbestimmungen zu berücksichtigen.

● Ein Betrieb der Maschine ohne die vom Werk angebrachten Schutzvorrichtungen ist nicht erlaubt.

● Das Einschalten und Betreiben der Maschine darf nur durch die entsprechend unterwiesene Bedienperson erfolgen.

● Beim Wechseln von Nähwerkzeugen, wie z. B. Nadel, Nähfuß, Stichplatte, Stoffschieber und Spule, beim Einfädeln, bei Verlassen des Arbeitsplatzes und bei Wartungsarbeiten, ist die Maschine elektrisch abzuschalten, d. h. durch Betätigen des Hauptschalters oder durch Herausziehen des Netzsteckers.
Bei mechanisch betätigten Kupplungsmotoren ist der Stillstand des Motors abzuwarten.

● Bei Wartungs- und Reparaturarbeiten an pneumatischen Einrichtungen ist die Maschine vom pneumatischen Versorgungsnetz zu trennen.
Ausnahmen sind nur bei Justierarbeiten und Funktionsüberprüfungen durch entsprechend unterwiesene Fachkräfte zulässig.

● Arbeiten an der elektrischen Ausrüstung dürfen nur durch Elektrofachkräfte oder entsprechend unterwiesene Personen durchgeführt werden.
Arbeiten an unter Spannung stehenden Teilen und Einrichtungen sind, abgesehen von zulässigen Abweichungen gemäß DIN 57 105, bzw. VDE 0105 nicht erlaubt.

Important notes

● During the first two weeks run the machine at 3/4 of its top speed only.

● Always make sure the take-up lever is at its highest point before you remove the material (on subcl. -900/.. machines the take-up lever is positioned up automatically).

● To avoid trouble, clean the machine regularly (p. 22) and note the lubricating instructions (p. 5).

Safety instructions

● The machine must only be used for the purpose it was designed for. In case of conversion into another version all valid safety instructions have to be considered.

● Do not operate the machine without the safety devices it is equipped with.

● The machine must only be switched on and operated by persons who have been instructed accordingly.

● When exchanging gauge parts (e.g. needle, presser foot, needle plate, feed dog, bobbin), threading the machine or leaving it, and when making maintenance work, the machine must be disconnected either by actuating the master switch or by removing the mains plug.
In case of mechanically-actuated clutch motors wait for the motor to stand still.

● When carrying out maintenance- or repair work on pneumatic devices the machine must be disconnected from the pneumatic supply source.
The only exceptions permitted are adjustments and performance checks made by competent personnel.

● Work on the electrical equipment of the machine must only be carried out by electricians or other persons who have been instructed accordingly.
Apart from the permissible deviations according to DIN 57 105 and VDE 0105 work on live parts and equipment is not permitted.

Conseils importants

● Pendant les 2 premières semaines, ne faire tourner la machine qu'aux 3/4 de sa vitesse maximale.

● A l'enlèvement de l'ouvrage, le levier releveur de fil doit toujours se trouver au point haut de sa course (sur les machines en -900/.., le positionnement du levier releveur de fil au point haut de sa course a lieu automatiquement).

● Pour éviter les dérangements, nettoyer régulièrement la machine (page 22) et observer les prescriptions relatives au graissage (page 5).

Recommandations de sécurité

● N'utiliser la machine que pour les travaux auxquels elle est destinée. En cas de transformation en une autre version, respecter toutes les prescriptions de sécurité valables.

● Ne pas utiliser la machine sans les dispositifs de sécurité.

● Seule l'opératrice instruite en conséquence devra mettre la machine en circuit et coudre.

● Avant le changement d'organes de couture tels que l'aiguille, le pied presseur, la plaque à aiguille, la griffe et la canette, avant l'enfilage, avant de quitter la machine et avant les travaux d'entretien, la machine est à mettre hors circuit à l'interrupteur général ou par enlèvement de la fiche secteur. Pour les moteurs-transmetteurs mécaniques, attendre l'arrêt du moteur.

● Pour les travaux d'entretien et de réparation au système pneumatique, couper la machine du réseau pneumatique.
Seules exceptions admises: réglages et contrôles par du personnel compétent.

● Les travaux aux équipements électriques sont à confier à un électricien ou à du personnel compétent. Les travaux aux pièces et dispositifs sous tension ne sont pas admis, sauf les exceptions selon la norme DIN 57 105 ou VDE 0105.

Observaciones importantes

● Durante las 2 primeras semanas de rodaje no deberá marchar la máquina más de 3/4 de su velocidad máxima.

● Al retirar el material de costura, coloque siempre la palanca tirahilos en su posición superior (en máquinas con -900/.., la posición superior de la palanca tirahilos tiene lugar automáticamente).

● Con el fin de evitar posibles averías, engrase la máquina con regularidad (página 22) y observe las instruciones para el engrase (página 5).

Normas de seguridad

● No utilice la máquina más que para los trabajos para los que esté destinada. Al transformarla en otro tipo, téngase en cuenta todas las normas de seguridad vigentes.

● No está permitido usar la máquina sin los dispositivos de protección montados en fábrica.

● La máquina sólo deberá ser conectada y manejada por la persona instruida al respecto.

● Al cambiar órganos de costura (aguja, prensatelas, placa de aguja, transportador, canilla, etc.) lo mismo que al enhebrar, al abandonar el puesto de costura y al hacer trabajos de mantenimiento, la máquina deberá desconectarse eléctricamente con el interruptor general o retirando el enchufe de la red.
En motores de embrague accionados mecánicamente hay que esperar a que se pare el motor.

● Al efectuar trabajos de reparación y mantenimiento, habrá que desconectar la máquina de la red de alimentación neumática.
Sólo se admiten excepciones en el caso de ajustes o controles efectuados por personal especializado.

● Los trabajos en el equipo eléctrico deberán ser realizados por electricistas competentes o por personal instruido al caso.
No está permitido realizar trabajos en piezas y dispositivos que estén bajo tensión, salvo en las excepciones de la norma DIN 57 105 ó VDE 0105.

Machine Wiring *Diagram 20001*

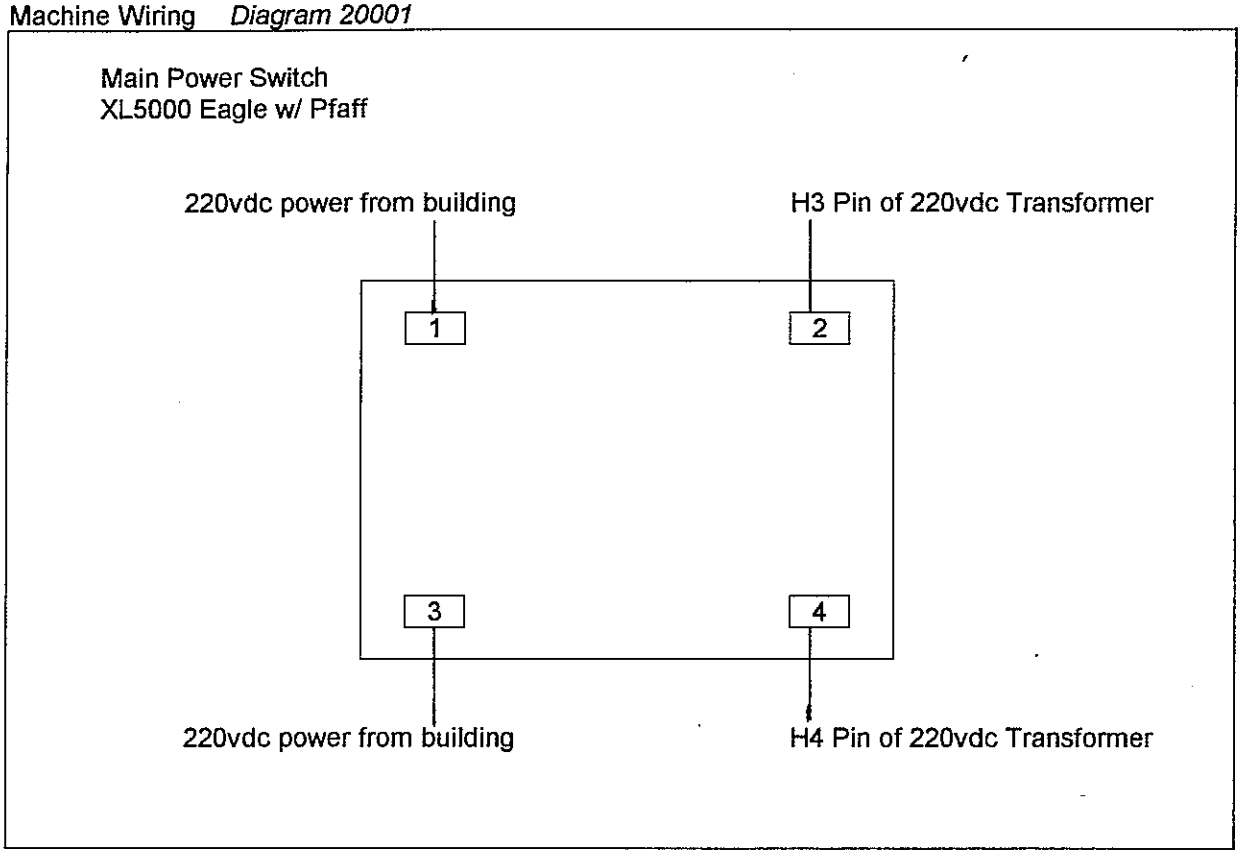

220vdc Main Transformer
XL5000 Eagle w/ Pfaff

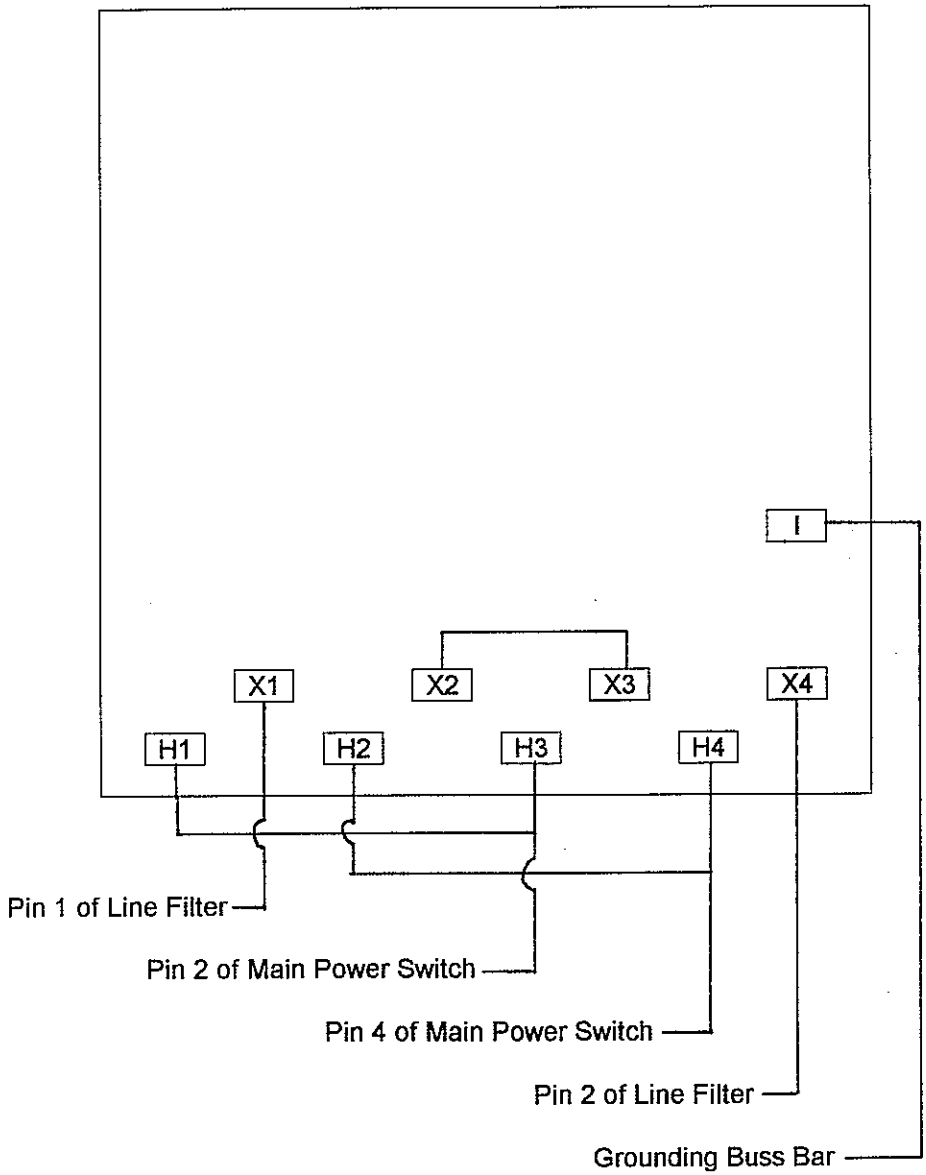

Line Filter
XL5000 Eagle w/ Pfaff

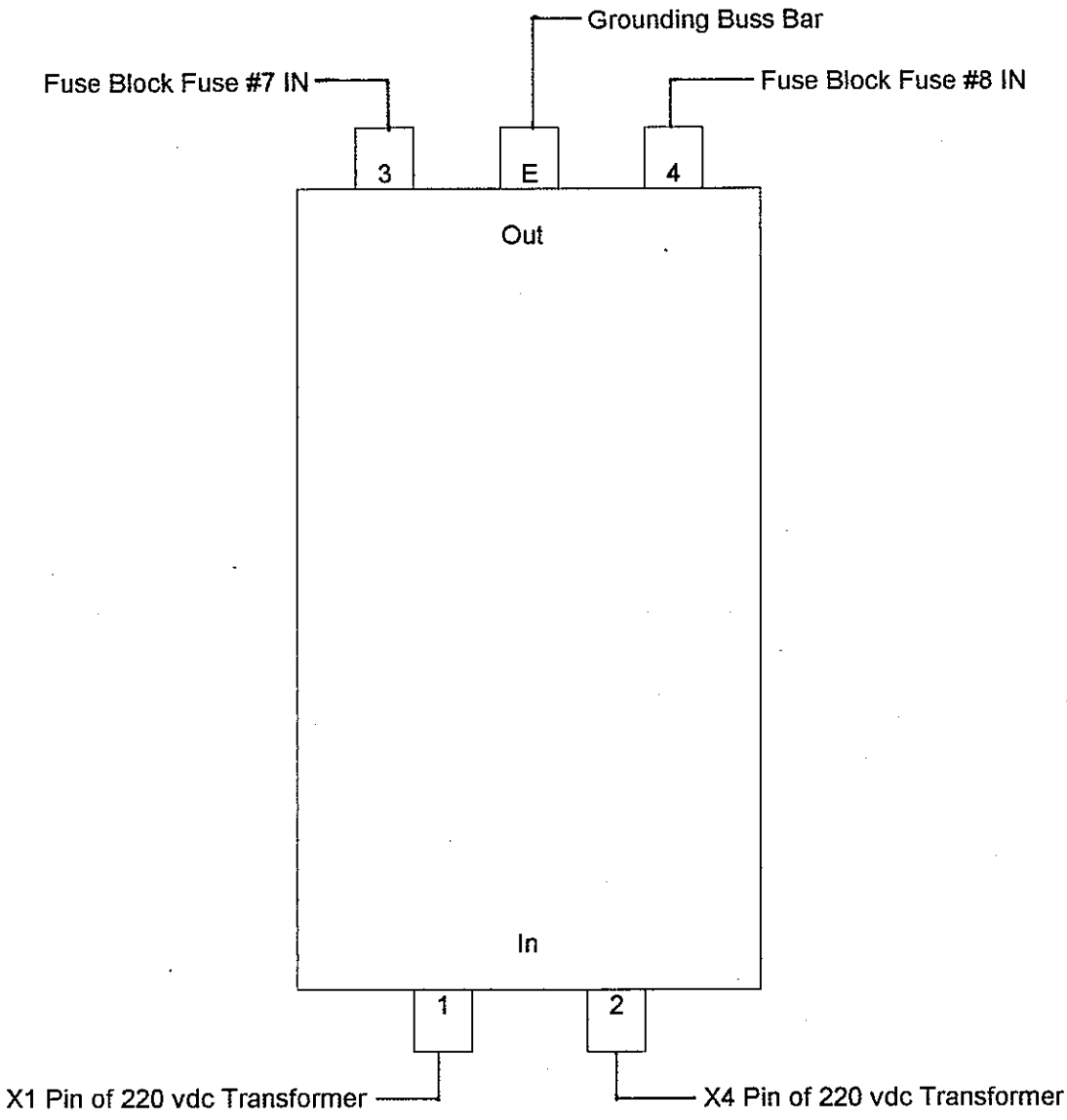

Machine Wiring *Diagram 20004*

Fuse Block
XL5000 Eagle w/ Pfaff

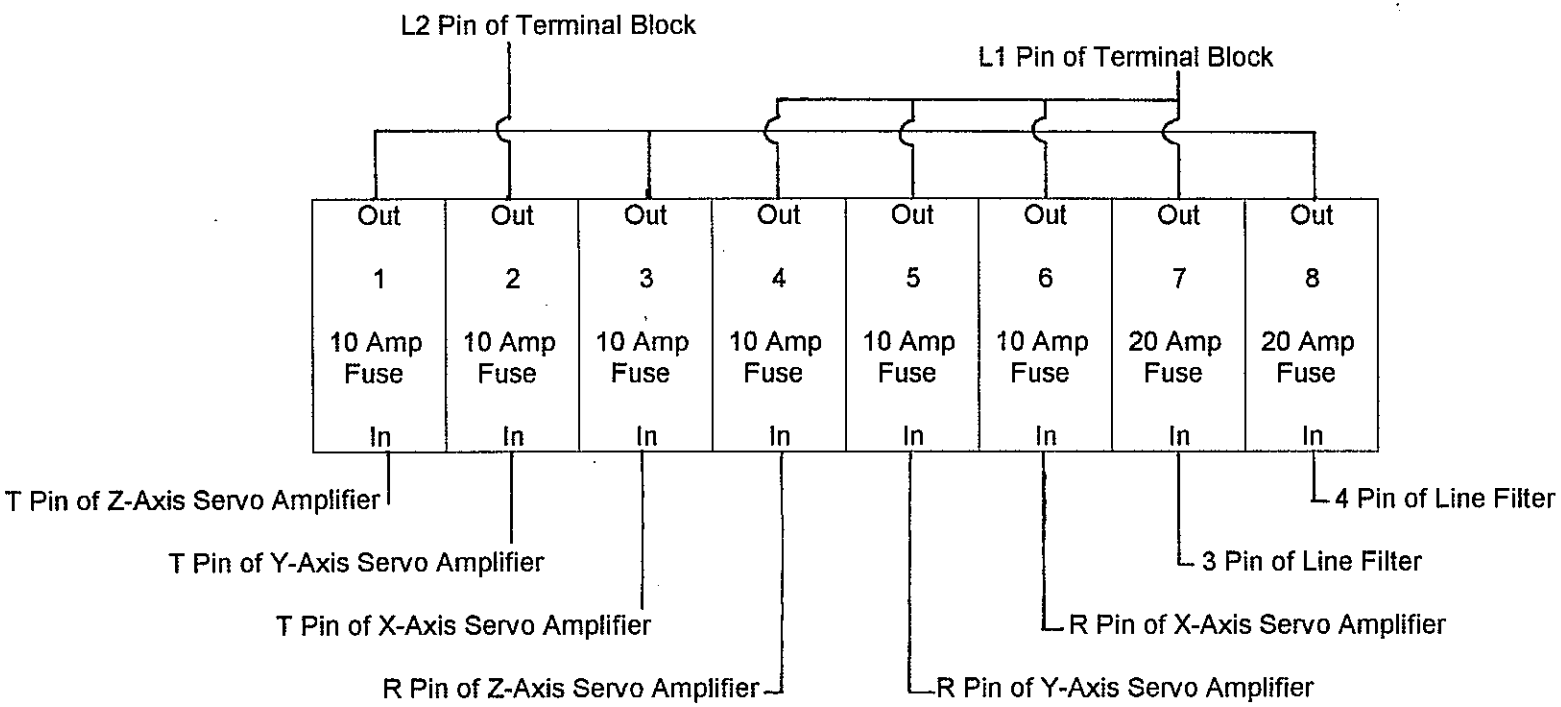

Terminal Block
XL5000 Eagle w/ Pfaff

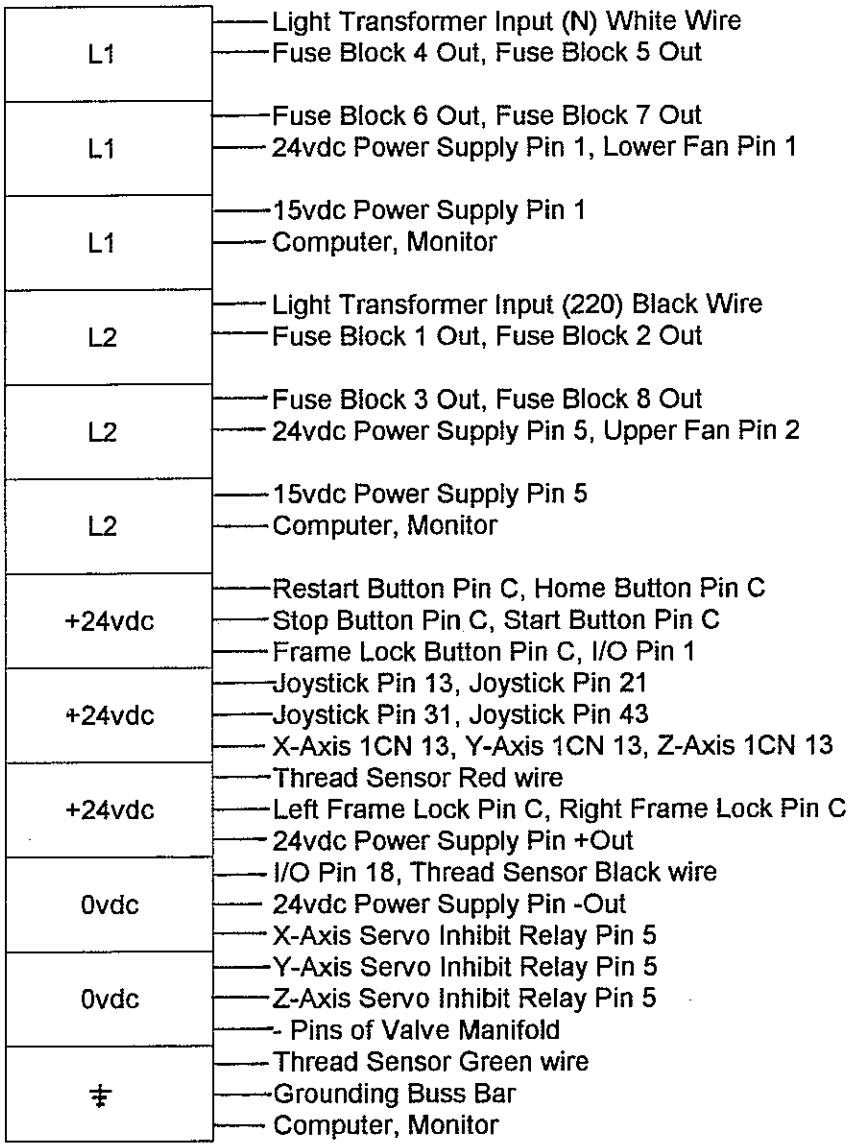

Input/Output Board
XL5000 Eagle w/ Pfaff

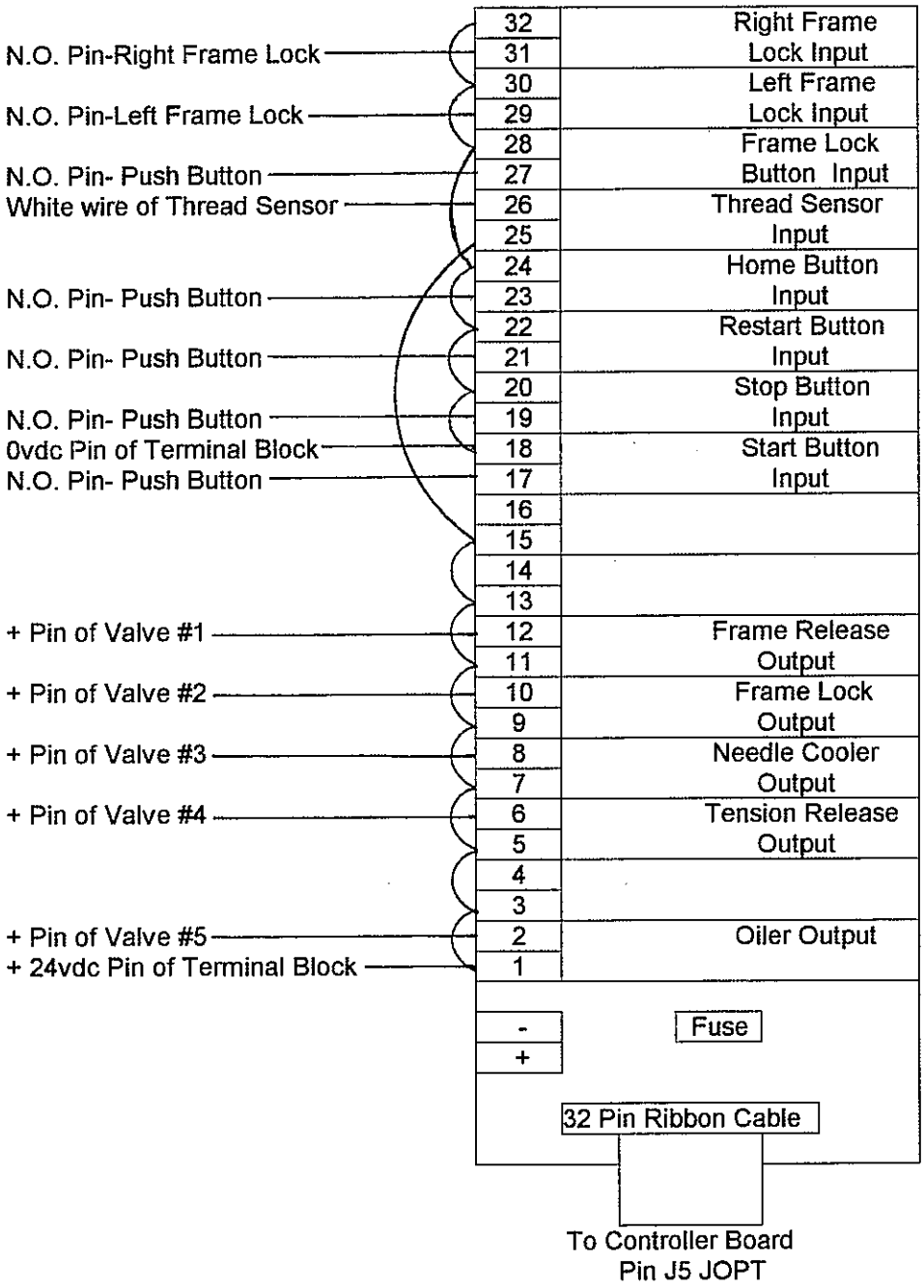

60 Pin Connector
XL5000 Eagle w/ Pfaff

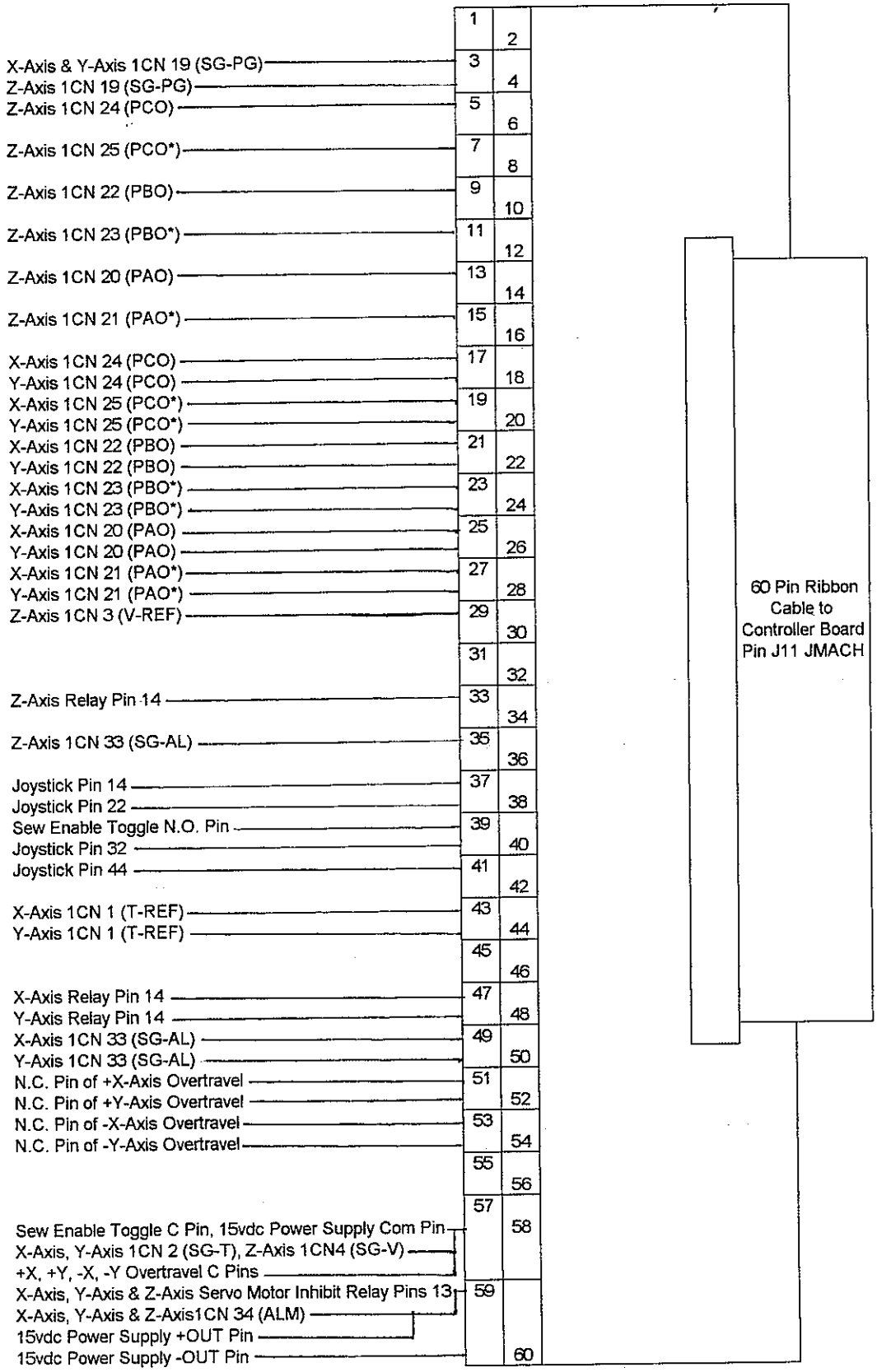

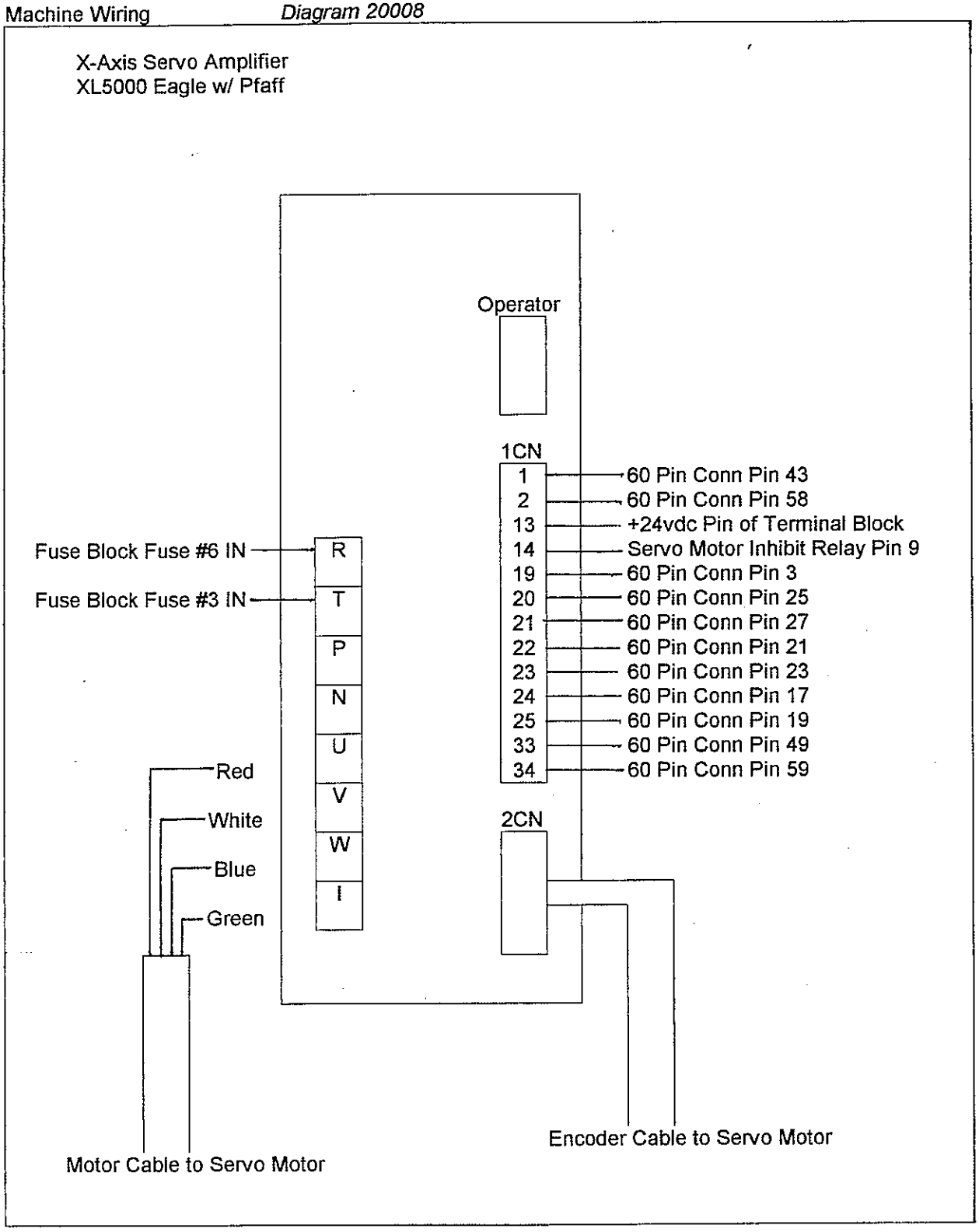
X-Axis Servo Amplifier
XL5000 Eagle w/ Pfaff
Operator
1CN
1
2
13
14
19
20
21
22
23
24
25
33
34
60 Pin Conn Pin 43
60 Pin Conn Pin 58
+24vdc Pin of Terminal Block
Servo Motor Inhibit Relay Pin 9
60 Pin Conn Pin 3
60 Pin Conn Pin 25
60 Pin Conn Pin 27
60 Pin Conn Pin 21
60 Pin Conn Pin 23
60 Pin Conn Pin 17
60 Pin Conn Pin 19
60 Pin Conn Pin 49
60 Pin Conn Pin 59
Fuse Block Fuse #6 IN
Fuse Block Fuse #3 IN
R
T
P
N
U
V
W
I
2CN
Red
White
Blue
Green
Motor Cable to Servo Motor
Encoder Cable to Servo Motor

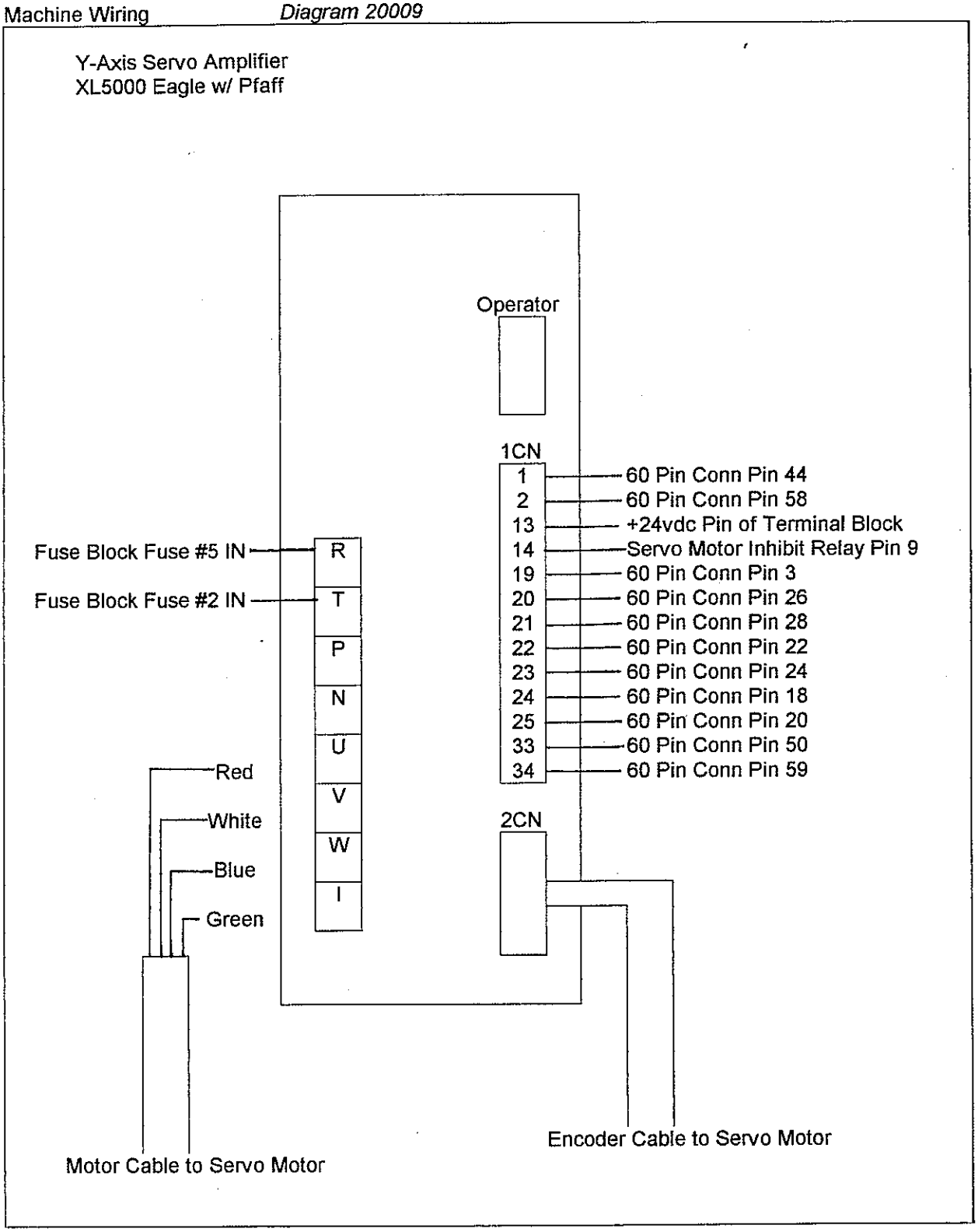
Y-Axis Servo Amplifier
XL5000 Eagle w/ Pfaff
Operator
1CN
1
2
13
14
19
20
21
22
23
24
25
33
34
60 Pin Conn Pin 44
60 Pin Conn Pin 58
+24vdc Pin of Terminal Block
Servo Motor Inhibit Relay Pin 9
60 Pin Conn Pin 3
60 Pin Conn Pin 26
60 Pin Conn Pin 28
60 Pin Conn Pin 22
60 Pin Conn Pin 24
60 Pin Conn Pin 18
60 Pin Conn Pin 20
60 Pin Conn Pin 50
60 Pin Conn Pin 59
Fuse Block Fuse #5 IN
Fuse Block Fuse #2 IN
R
T
P
N
U
V
W
I
Red
White
Blue
Green
2CN
Motor Cable to Servo Motor
Encoder Cable to Servo Motor

Z-Axis Servo Amplifier
XL5000 Eagle w/ Pfaff

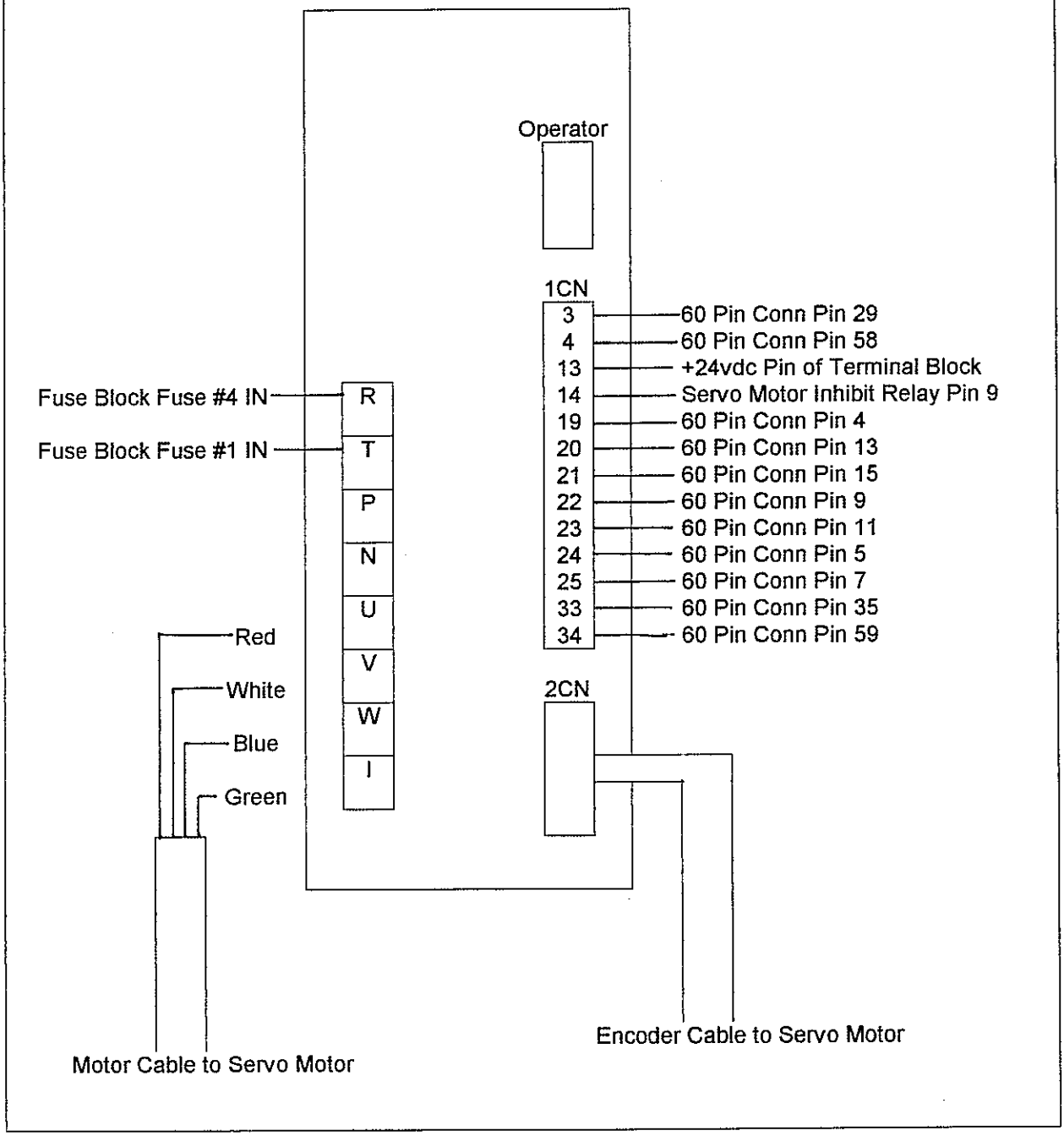

Servo Motor Inhibit Relays
XL5000 Eagle w/ Pfaff

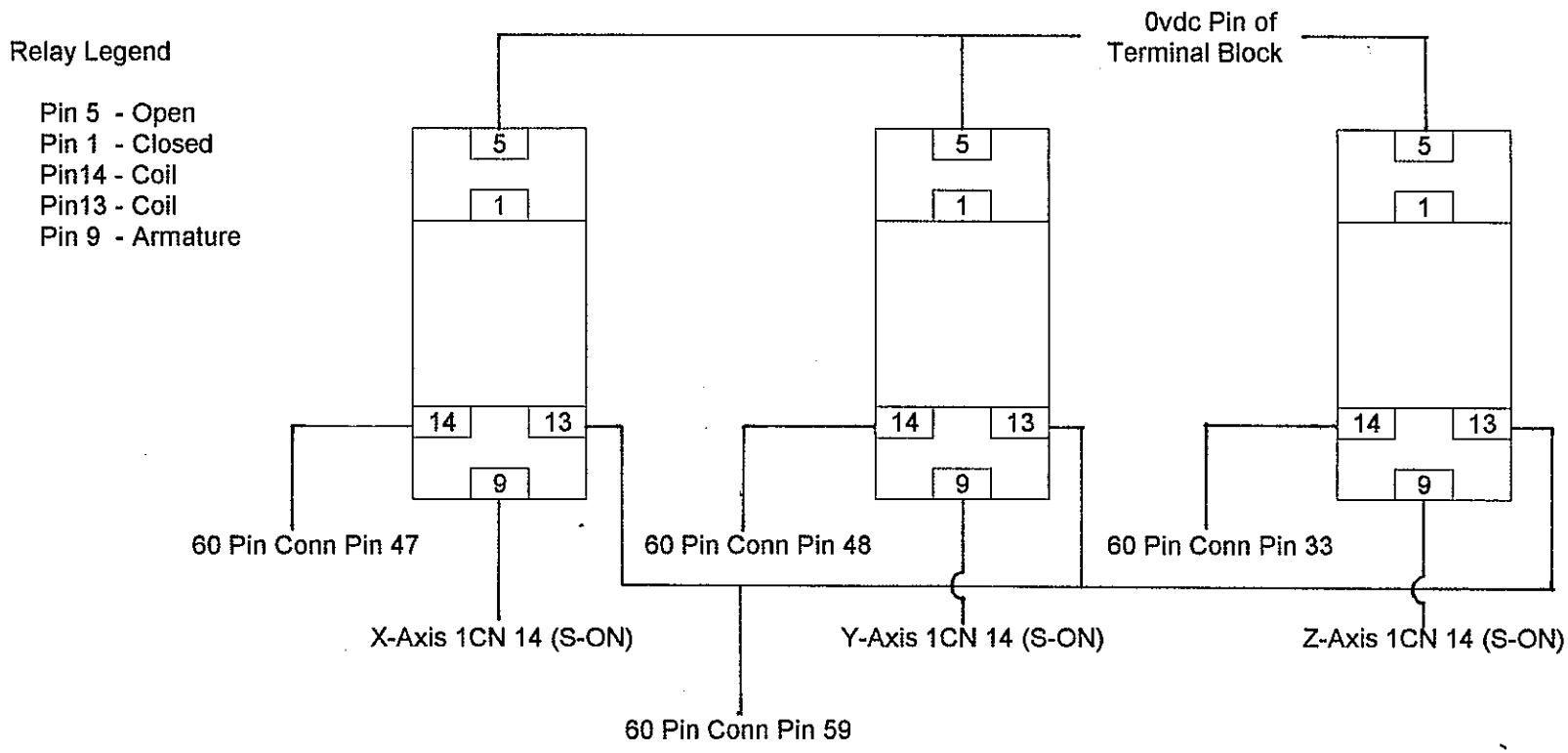

24vdc Power Supply
XL5000 Eagle w/ Pfaff

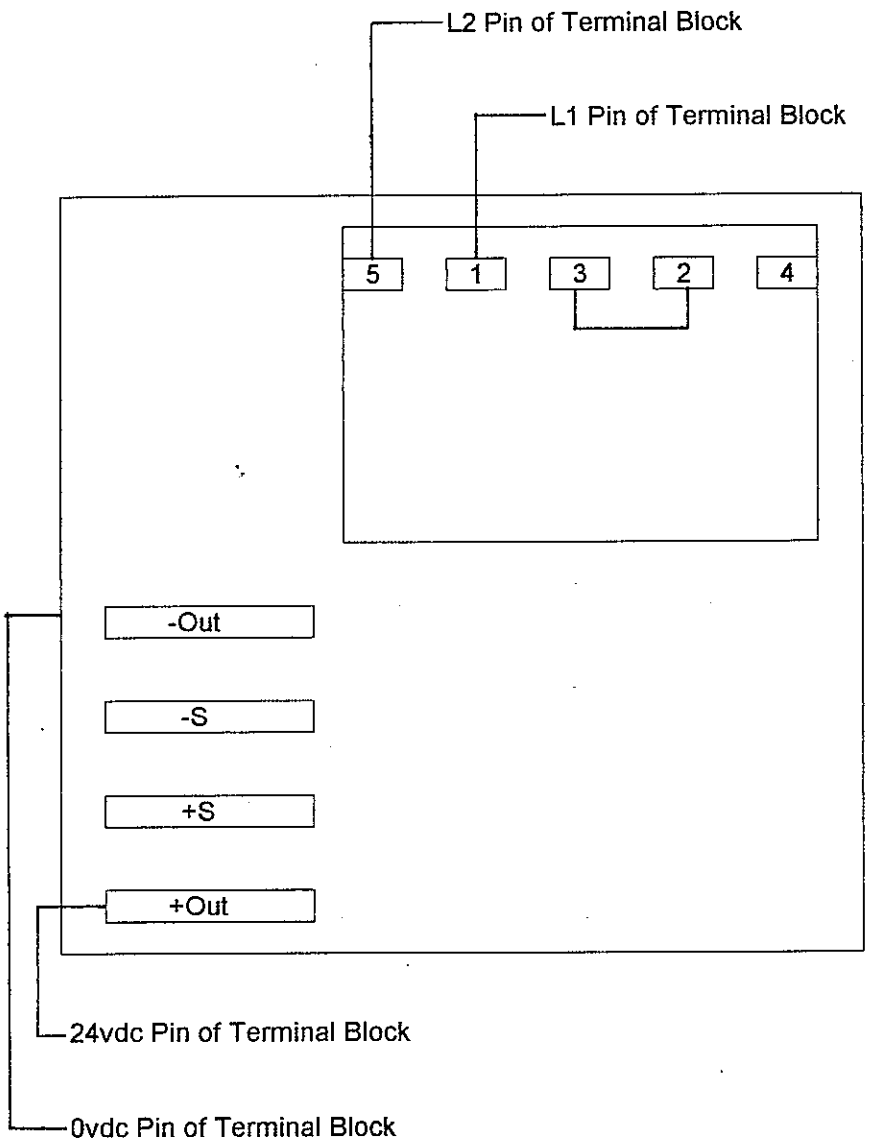

15vdc Power Supply
XL5000 Eagle w/ Pfaff

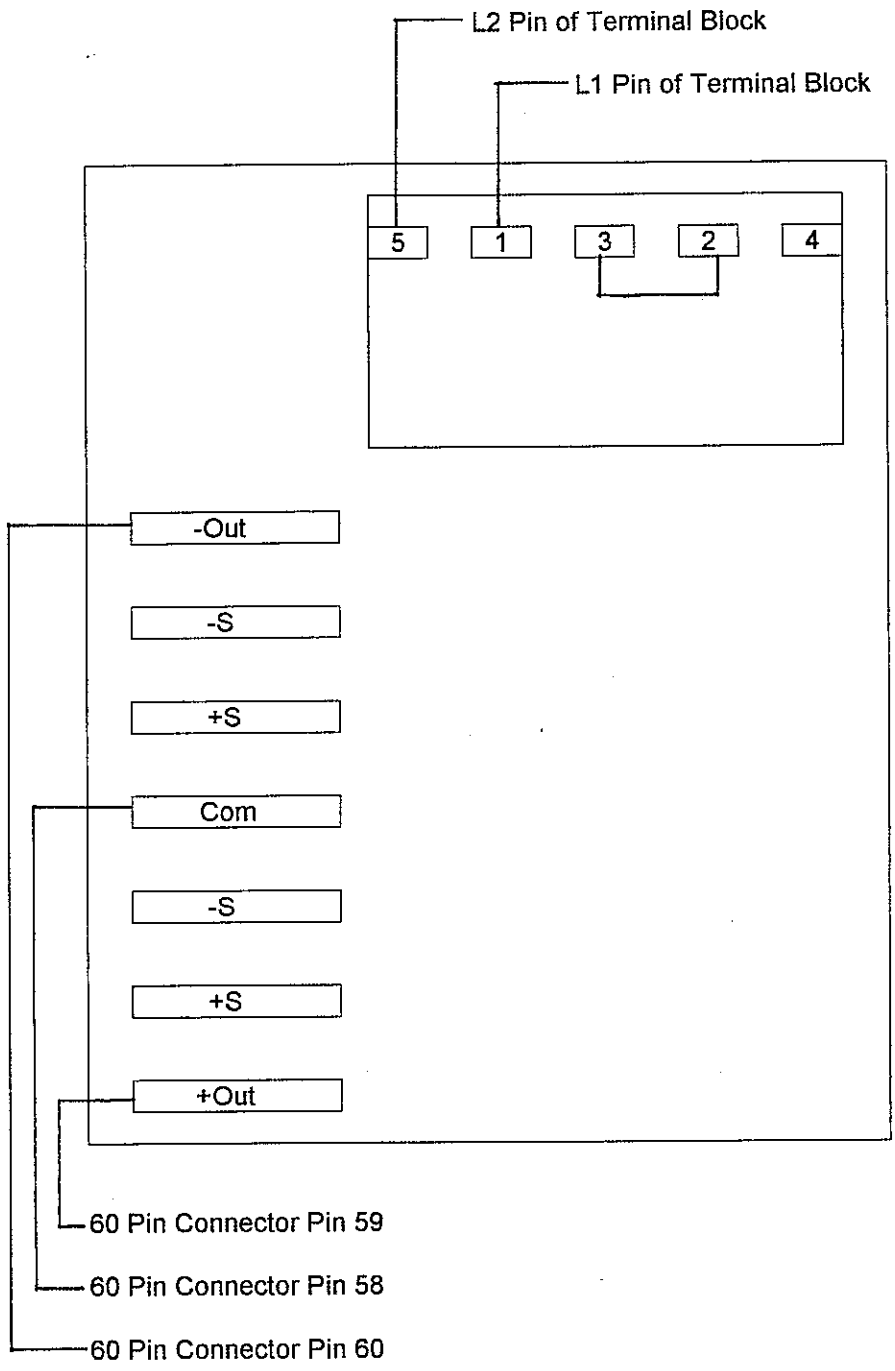

Machine Wiring *Diagram 20014*

Light Transformer
XL5000 Eagle w/ Pfaff

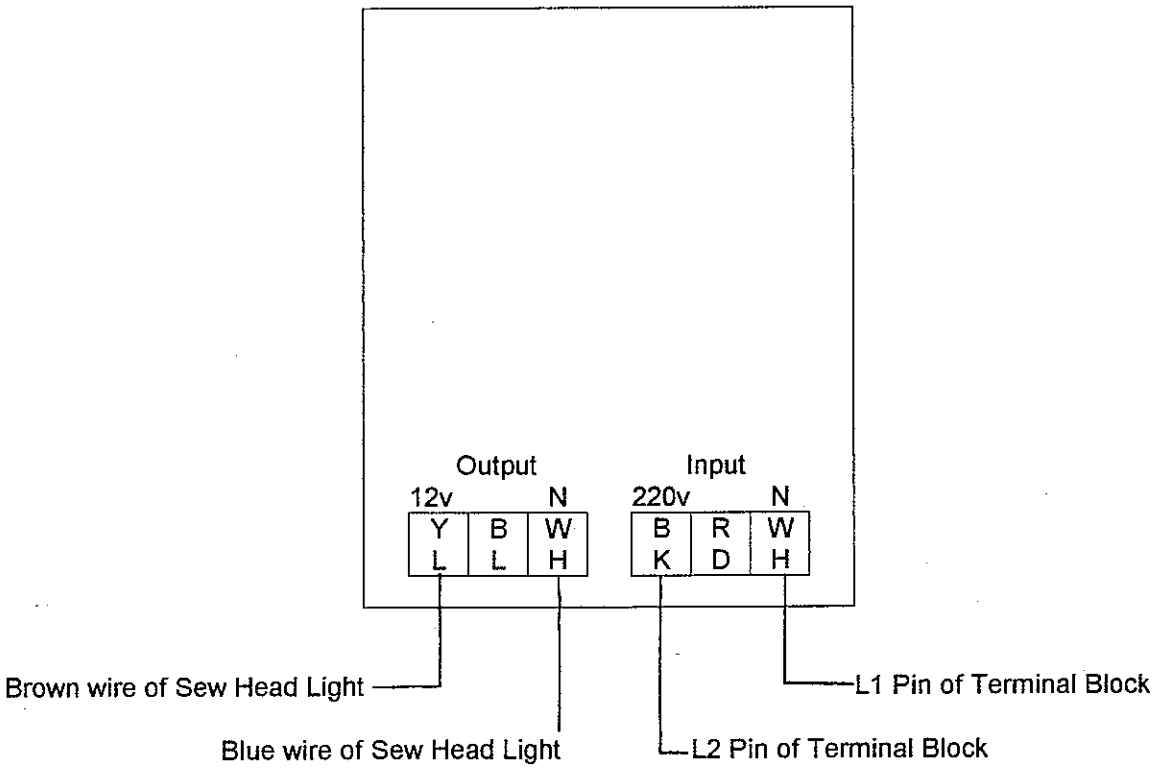

Machine Wiring *Diagram 20015*

Valve manifold Assembly
XL5000 Eagle w/ Pfaff

Hose Legend

Pressure	- Blue
Relief	- Blue
Frame Lock	- Orange
Frame Release	- Red
Oiler	- Clear
Needle Cooler	- Yellow
Tension Release	- Green
Thread Cutter.	- Green

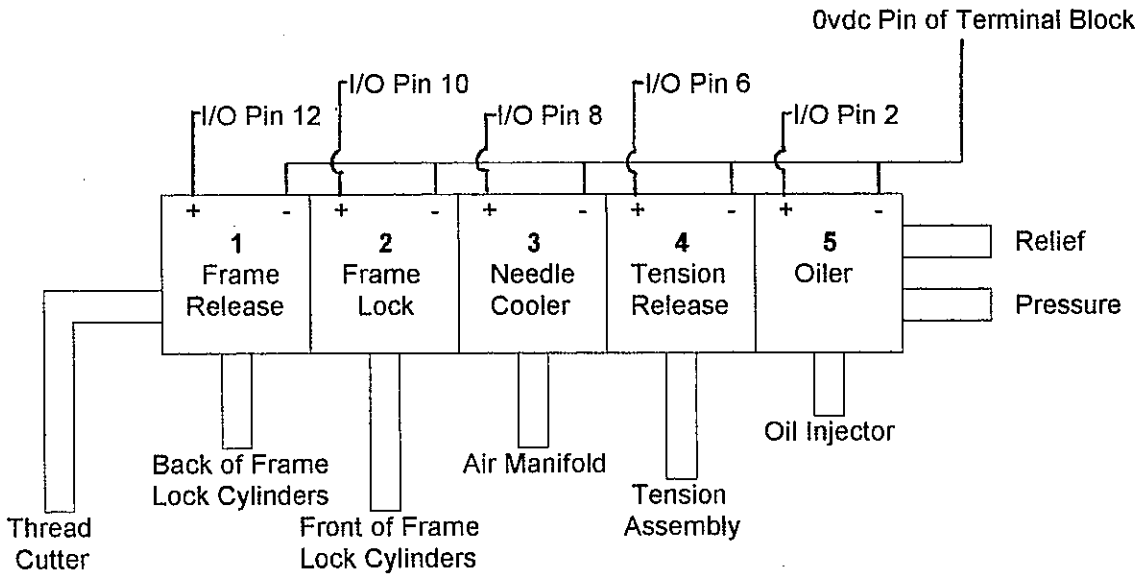

Start/Stop Station
XL5000 Eagle w/ Pfaff

Wiring Legend

Start NO	- Purple
Start C	- Pink
Stop NO	- Brown
Stop C	- Blue
Home NO	- Tan
Home C	- Yellow
Frame Lock NO	- Gray
Frame Lock C	- Orange
Restart NO	- Green
Restart C	- Red
Sew Enable NO	- Black
Sew Enable C	- White

Common - C
Normally Open - NO

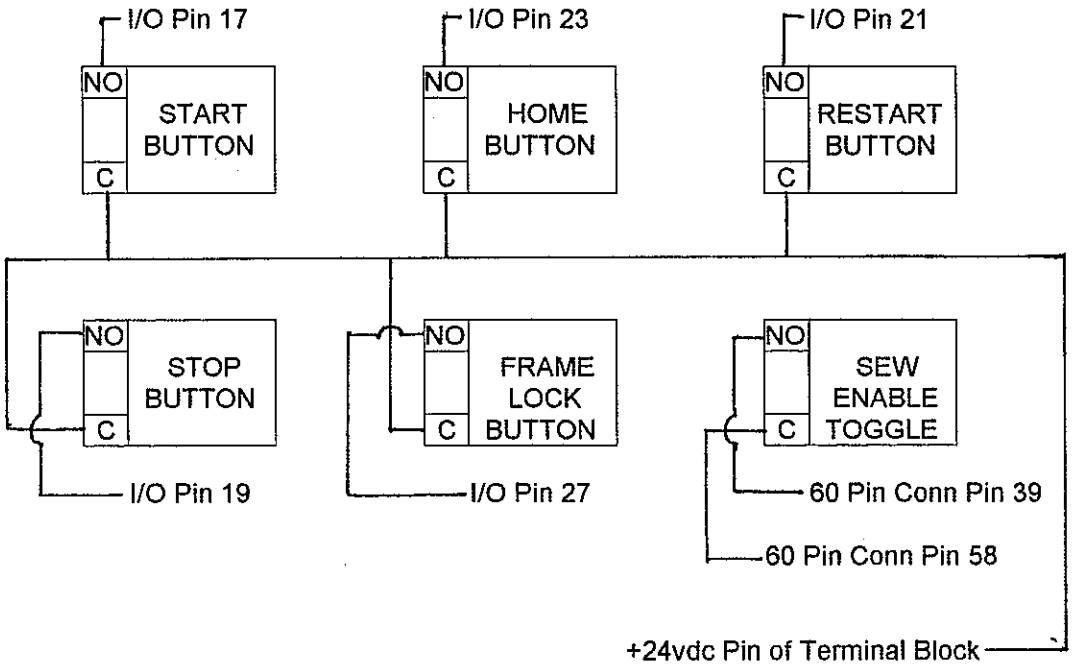

Machine Wiring *Diagram 20017*

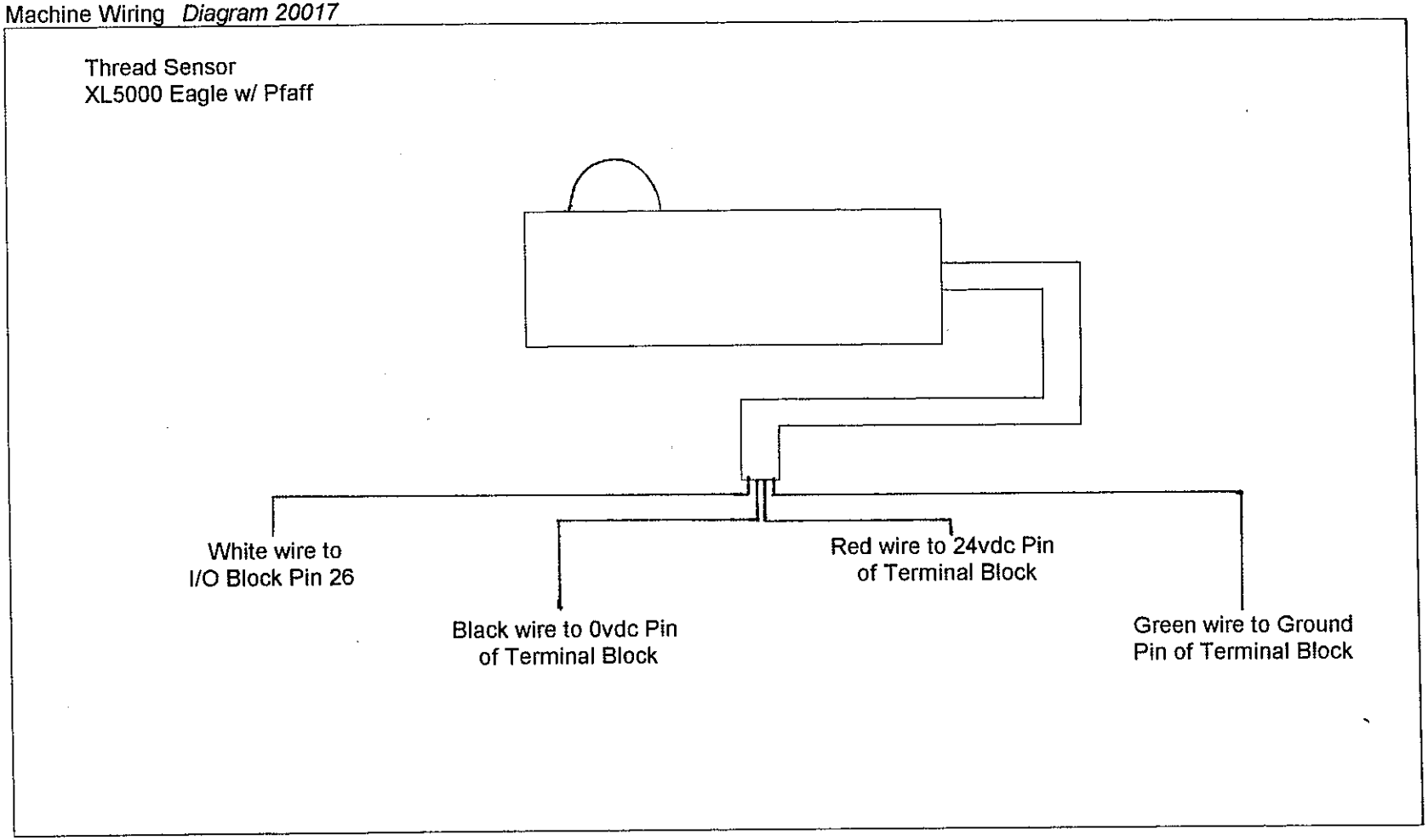

Machine Wiring *Diagram 20018*

Sew Head Light
XL5000 Eagle w/ Pfaff

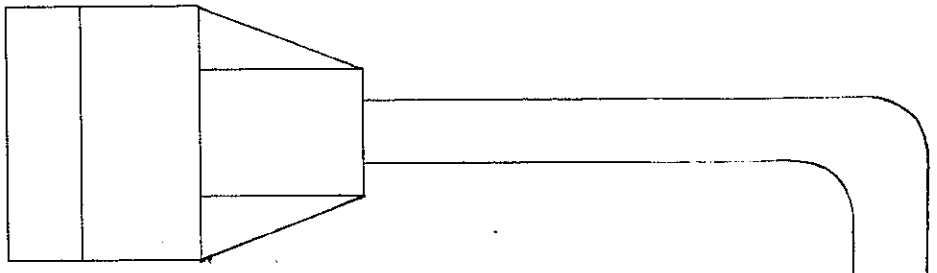

*12vdc Bulb

Yellow 12vdc Output Pin of Light Transformer

White N Output Pin of Light Transformer

Frame Lock Switches
XL5000 Eagle w/ Pfaff

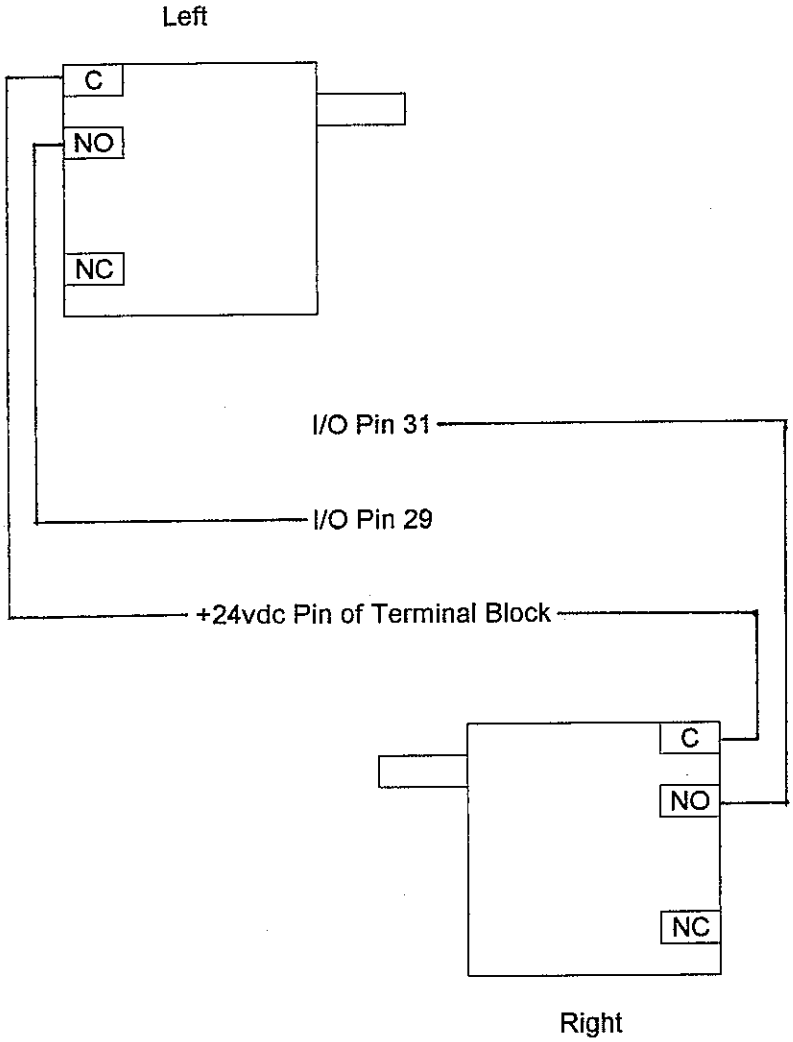

X-Axis Overtravel Limit Switches
XL5000 Eagle w/ Pfaff

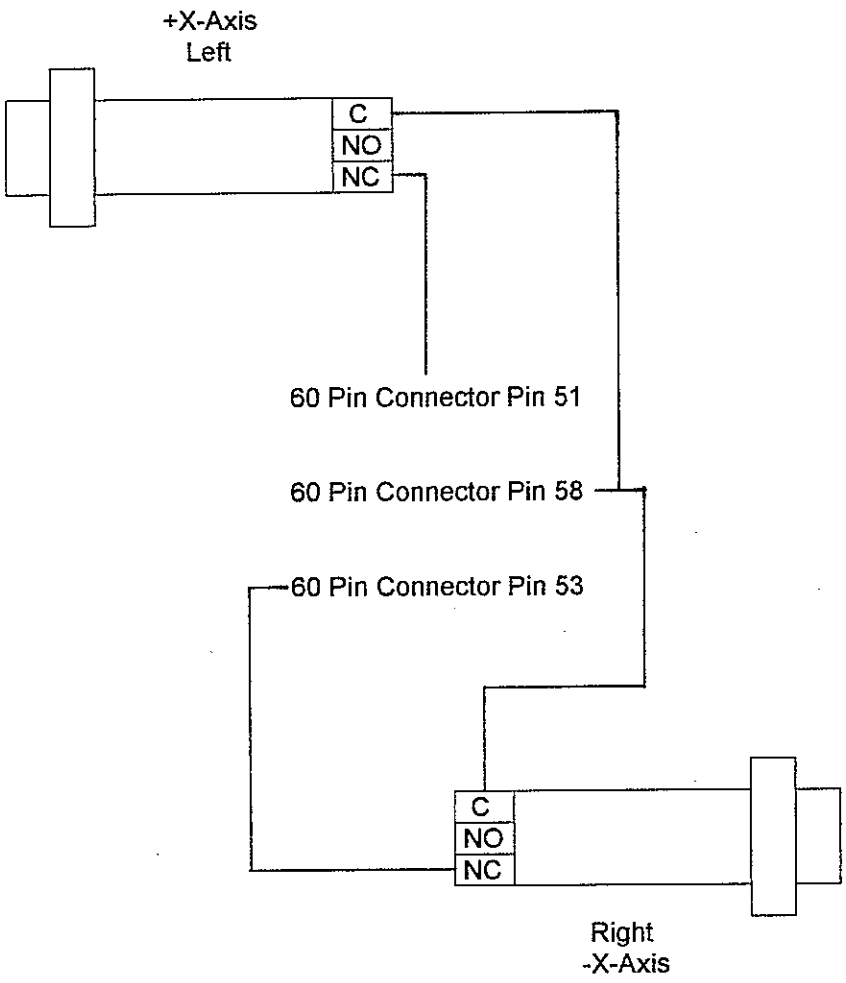

Y-Axis Overtravel Limit Switches
XL5000 Eagle w/ Pfaff

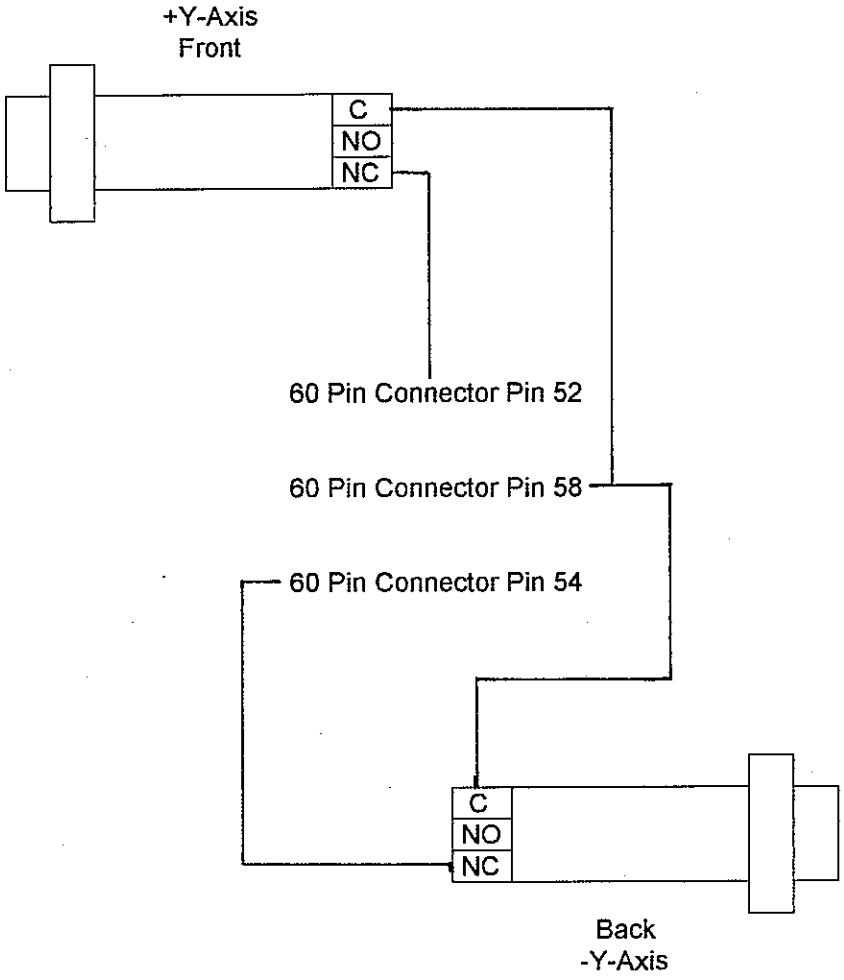

Machine Wiring *Diagram 20022*

Computer
XL5000 Eagle w/ Pfaff

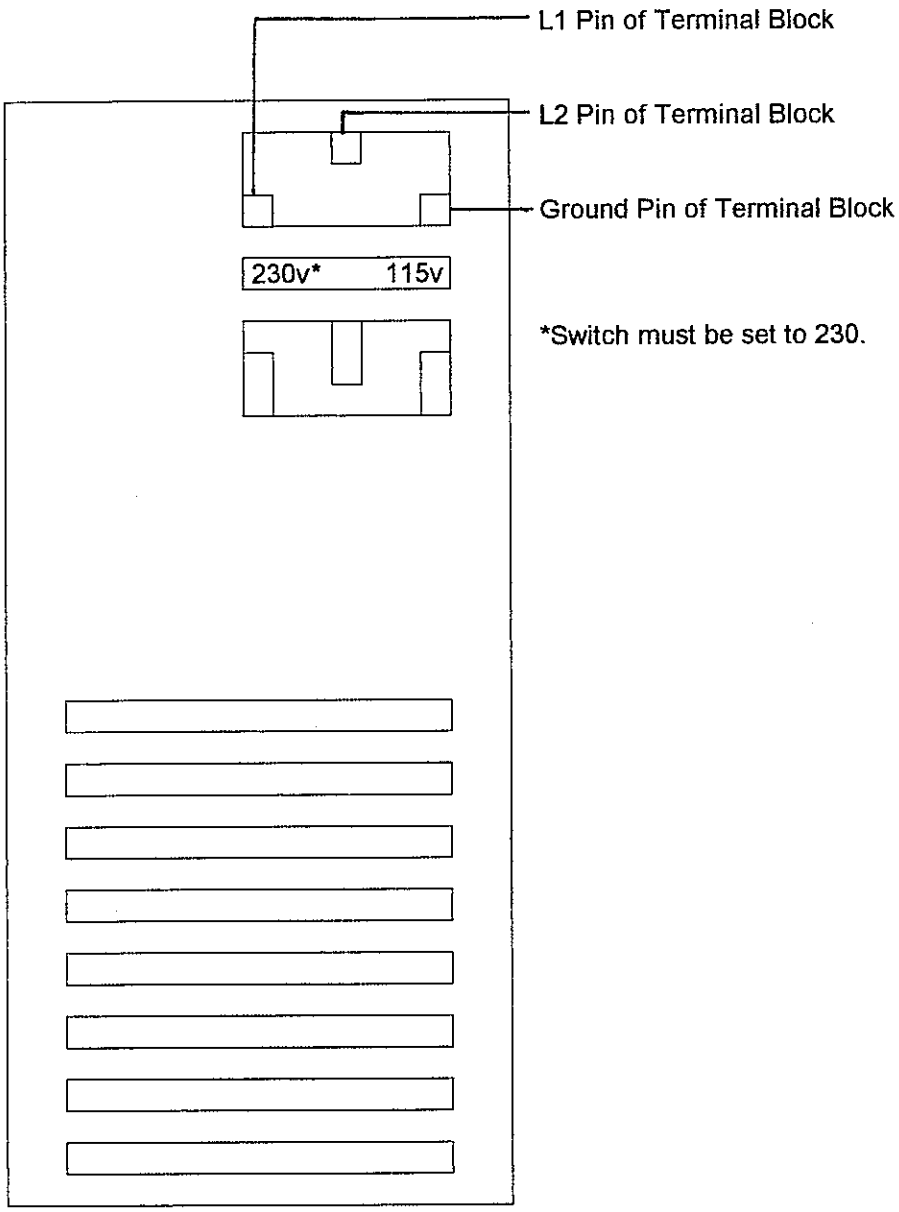

Monitor
XL5000 Eagle w/ Pfaff

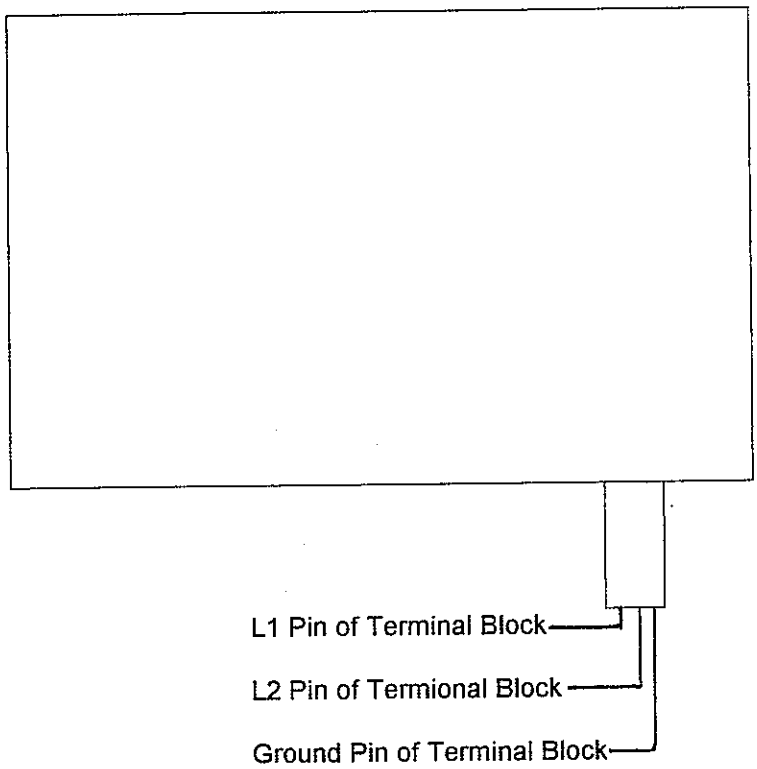

Grounding Buss Bar
XL5000 Eagle w/ Pfaff

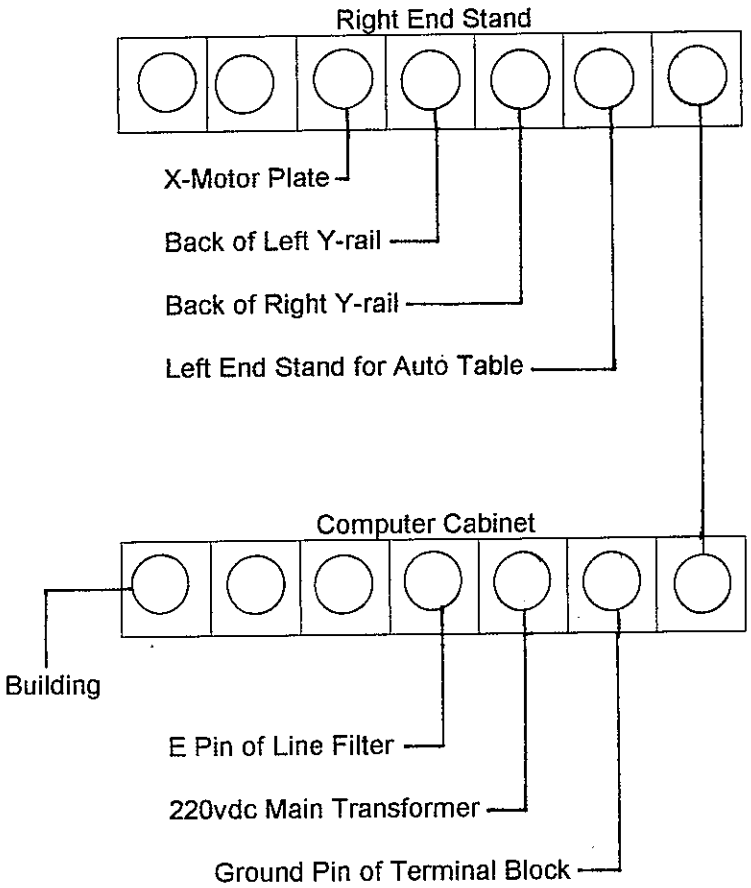

Cabinet Fans
XL5000 Eagle w/ Pfaff

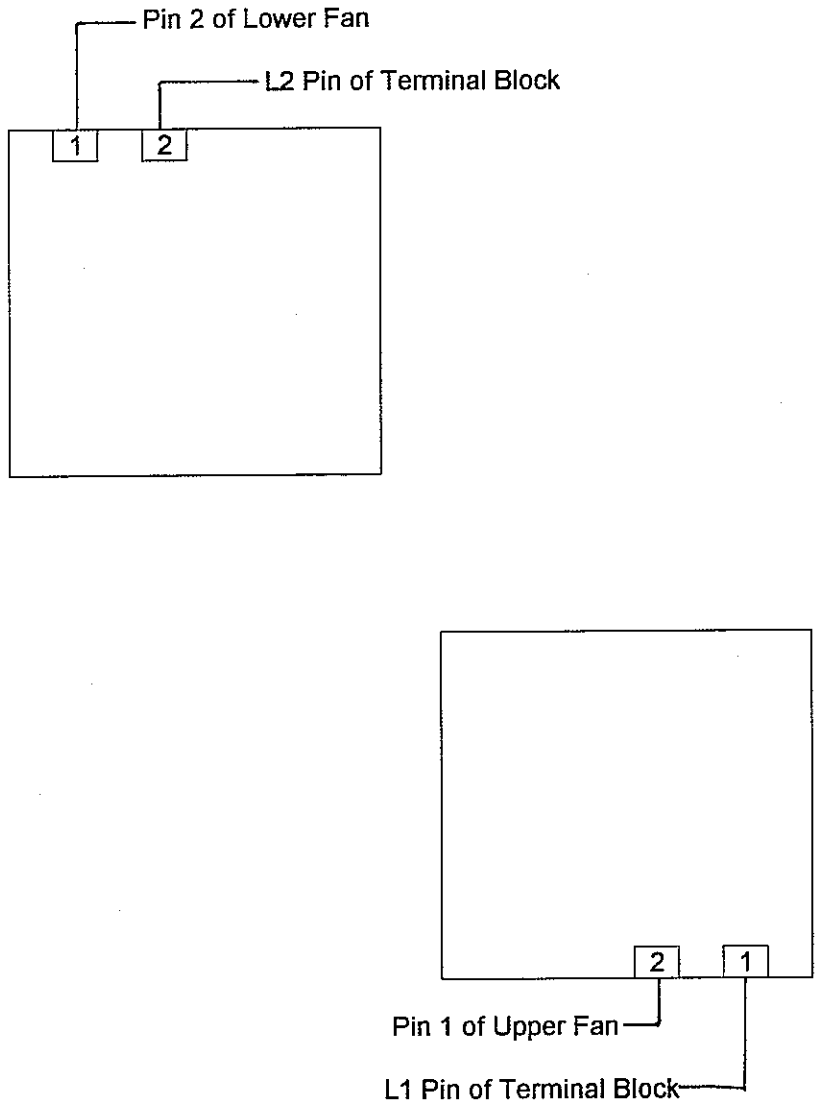

Joystick Control
XL5000 Eagle w/ Pfaff

Wiring Legend

Pin 13 - Black
Pin 14 - Red
Pin 21 - Black
Pin 22 - Blue
Pin 31 - Black
Pin 32 - Brown
Pin 43 - Black
Pin 44 - Pink

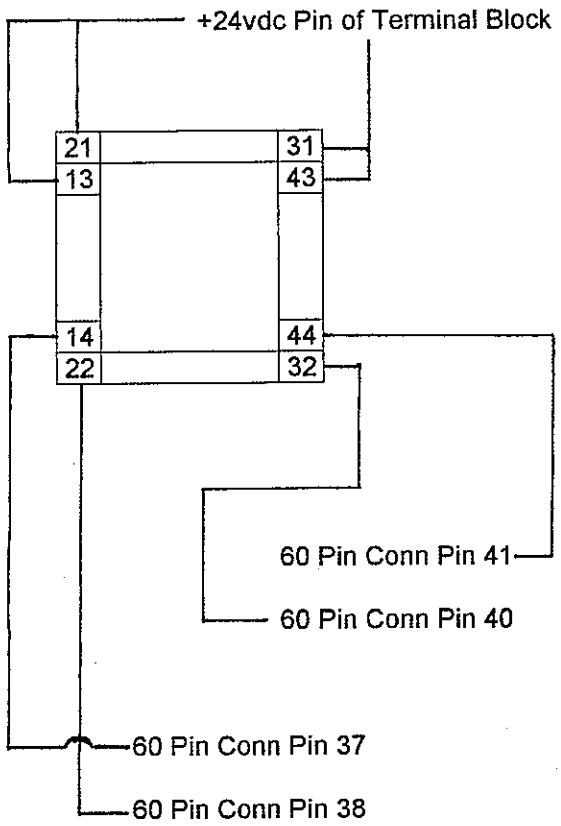

I. I-VARIABLE SUMMARY

I0	I80	General Card Set-up (Global)
I81	I99	Multiple Resolver Gear Ratios
I100	I186	Motor #1 Set-up
I187	I199	Coordinate System 1 Set-up
I200	I286	Motor #2 Set-up
I287	I299	Coordinate System 2 Set-up
:	:	
I800	I886	Motor #8 Set-up
I887	I899	Coordinate System 8 Set-up
I900	I979	Encoder 1 - 16 Set-up (in groups of 5)
I980	I1023	Reserved for future use

II. GLOBAL I-VARIABLES

I1		Serial Communications Mode
I2		Control Panel Disable
I3		I/O Handshake Mode
I4		Communications Checksum Enable
I5		PLC Programs On/Off
I6		Error Reporting Mode
I8		Real Time Interrupt Period
I9		Full/Abbreviated Program Listing Form
I10		Servo Interrupt Time
I11		Programmed Move Calculation Time
I12		Jog-to-Position Calculation Time
I13		Programmed Move Segmentation Time
I14		Auto Position Match on Run
I15		Degree/Radian Control for User Trig Functions
I16		Rotary Buffer Request On Point
I17		Rotary Buffer Request Off Point
I18		Fixed Buffer Full Warning Point
I19		Data Gathering Period (in servo cycles)
I20		Data Gathering Selection Mask
I21	I44	Data Gathering Source (1 to 24 address)
I45		Data Gathering Buffer Location and Mode
I47	I49	Dual-Ported RAM Function Control
I56	I59	Dual-Ported RAM Function Control
I50		Rapid Move Mode Control
I51		Leadscrew Compensation Enable
I52		'\' Feed Hold Slew Rate
I53		Program Step Mode Control

III. MOTOR I-VARIABLES

A. Motor Definition I-Variables

Ix00	Motor x Activate
Ix01	Motor x PMAC-Commutate Enable
Ix02	Motor x Command Output (DAC) Address
Ix03	Motor x Position Loop Feedback Address
Ix04	Motor x Velocity Loop Feedback Address
Ix05	Motor x Master (Handwheel) Position Address
Ix06	Motor x Master (Handwheel) Following Address
Ix07	Motor x Master (Handwheel) Scale Factor
Ix08	Motor x Position Loop Scale Factor
Ix09	Motor x Velocity Loop Scale Factor
Ix10	Motor x Power-on Position Address

B. Motor Safety I-Variables

Ix11	Motor x Fatal (Shutdown) Following Error Limit
Ix12	Motor x Warning Following Error Limit
Ix13	Motor x Positive Software Position Limit
Ix14	Motor x Negative Software Position Limit
Ix15	Motor x Deceleration Rate on Position Limit or Abort
Ix16	Motor x Maximum Permitted Velocity
Ix17	Motor x Maximum Permitted Programmed Acceleration
Ix19	Motor x Maximum Permitted Jog Acceleration

C. Motor Movement I-Variables

Ix20	Motor x (Jogging and Homing) Acceleration Time

Ix21 ..... Motor x (Jogging and Homing) S-Curve Time
Ix22 ..... Motor x Jog Speed
Ix23 ..... Motor x Homing Speed and Direction
Ix25 ..... Motor x Limit/Home Flag/Amp Flag Address
Ix26 ..... Motor x Home Offset
Ix27 ..... Motor x Position Rollover Range
Ix28 ..... Motor x In-Position Band
Ix29 ..... Motor x Output (First Phase) DAC Bias

D. Motor Basic Servo Control I-Variables

Ix30 ..... Motor x PID Proportional Gain
Ix31 ..... Motor x PID Derivative Gain
Ix32 ..... Motor x PID Velocity Feedforward Gain
Ix33 ..... Motor x PID Integral Gain
Ix34 ..... Motor x PID Integration Mode
Ix35 ..... Motor x PID Acceleration Feedforward Gain
Ix36 ..... Ix39 ..... Motor x Notch Filter Coefficients N1, N2, D1, D2

E. Motor Extended Filter Coefficients I-Variables

Ix40 ..... Ix58 ..... Motor x Pole Placement Coefficients (Option 6 Required)

F. Motor Basic Servo Control I-Variables

Ix59 ..... Motor x User-Written Servo Enable
Ix60 ..... Motor x Servo Cycle Extension Period
Ix63 ..... Motor x Integration Limit
Ix64 ..... Motor x "Deadband Gain Factor"
Ix65 ..... Motor x Deadband
Ix67 ..... Motor x Position Error ("Big Step") Limit
Ix69 ..... Motor x Output Command (DAC) Limit

G. Motor Commutation I-Variables

Ix70 ..... Motor x Number of Commutation Cycles (N)
Ix71 ..... Motor x Encoder Counts per N Commutation Cycles
Ix72 ..... Motor x Commutation Phase Angle
Ix73 ..... Motor x Phase Finding Output (DAC) Value
Ix74 ..... Motor x Phase Finding Time
Ix75 ..... Motor x Phasing Offset
Ix76 ..... Motor x Velocity Phase Advance Gain
Ix77 ..... Motor x Induction Motor Magnetization Current
Ix78 ..... Motor x Induction Motor Slip Gain
Ix79 ..... Motor x Second Phase Output (DAC) Bias
Ix80 ..... Motor x Power-Up Mode
Ix81 ..... Motor x Power-On Absolute Phasing Position Address
Ix83 ..... Motor x Ongoing Phasing Position Address

H. Further Motor I-Variables

Ix85 ..... Motor x Backlash Takeup Rate
Ix86 ..... Motor x Backlash Size
I9x ..... Motor x Second Resolver Gear Ratio
I8x ..... Motor x Third Resolver Gear Ratio

IV. COORDINATE SYSTEM I-VARIABLES (&x, x = 1 to 8)

Ix87 ..... Coordinate System x Default Program Acceleration Time
Ix88 ..... Coordinate System x Default Program S-Curve Time
Ix89 ..... Coordinate System x Default Program Feedrate
Ix90 ..... Coordinate System x Feedrate Time Units
Ix91 ..... Coordinate System x Default Working Program Number
Ix92 ..... Coordinate System x Move Blend Disable
Ix93 ..... Coordinate System x Time Base Control Register Address
Ix94 ..... Coordinate System x Time Base Slew Rate (and Limit)
Ix95 ..... Coordinate System x Feed Hold Deceleration Rate
Ix96 ..... Coordinate System x Circle Error Limit

VI. GATE ARRAY ENCODER SET-UP I-VARIABLES (I900 to I979)

I900, I905,...I975 ..... Encoder n Decode Control
I901, I906,...I976 ..... Encoder n Filter Disable
I902, I907,...I977 ..... Encoder n Capture Control
I903, I908,...I978 ..... Encoder n Flag Select

J11 JMACH (60-Pin Connector)

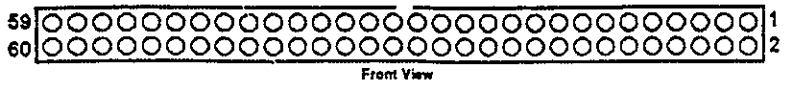

PIN #	SYMBOL	FUNCTION	DESCRIPTION	NOTES
1	+5V*	OUTPUT	+5V POWER	FOR ENCODERS
2	+5V *	OUTPUT	+5V POWER	FOR ENCODERS
3	GND	COMMON	DIGITAL COMMON	
4	GND	COMMON	DIGITAL COMMON	
5	CHC3	INPUT	ENCODER C CH. POSITIVE	CHAN #3
6	CHC4	INPUT	ENCODER C CH. POSITIVE	CHAN #4
7	CHC3/	INPUT	ENCODER C CH. NEGATIVE	CHAN #3 (DO NOT GND IF NOT USED)
8	CHC4/	INPUT	ENCODER C CH. NEGATIVE	CHAN #4 (DO NOT GND NOT USED)
9	CHB3	INPUT	ENCODER B CH. POSITIVE	CHAN #3
10	CHB4	INPUT	ENCODER B CH. POSITIVE	CHAN #4
11	CHB3/	INPUT	ENCODER B CH. NEGATIVE	CHAN #3 (DO NOT GND IF NOT USED)
12	CHB4/	INPUT	ENCODER B CH. NEGATIVE	CHAN #4 (DO NOT GND IF NOT USED)
13	CHA3	INPUT	ENCODER A CH. POSITIVE	CHAN #3
14	CHA4	INPUT	ENCODER A CH. POSITIVE	CHAN #4
15	CHA3/	INPUT	ENCODER A CH. NEGATIVE	CHAN #3 (DO NOT GND IF NOT USED)
16	CHA4/	INPUT	ENCODER A CH. NEGATIVE	CHAN #4 (DO NOT GND IF NOT USED)
17	CHC1	INPUT	ENCODER C CH. POSITIVE	CHAN #1
18	CHC2	INPUT	ENCODER C CH. POSITIVE	CHAN #2
19	CHC1/	INPUT	ENCODER C CH. NEGATIVE	CHAN #1 (DO NOT GND IF NOT USED)
20	CHC2/	INPUT	ENCODER C CH. NEGATIVE	CHAN #2 (DO NOT GND IF NOT USED)
21	CHB1	INPUT	ENCODER B CH. POSITIVE	CHAN #1
22	CHB2	INPUT	ENCODER B CH. POSITIVE	CHAN #2
23	CHB1/	INPUT	ENCODER B CH. NEGATIVE	CHAN #1 (DO NOT GND IF NOT USED)
24	CHB2/	INPUT	ENCODER B CH. NEGATIVE	CHAN #2 (DO NOT GND IF NOT USED)

J11 JMACH (60-Pin Connector)

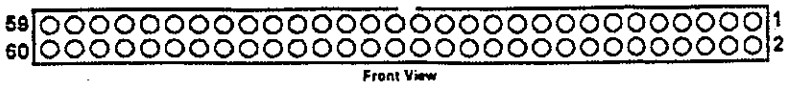

PIN #	SYMBOL	FUNCTION	DESCRIPTION	NOTES
25	CHA1	INPUT	ENCODER A CH. POSITIVE	CHAN #1
26	CHA2	INPUT	ENCODER A CH. POSITIVE	CHAN #2
27	CHA1/	INPUT	ENCODER A CH. NEGATIVE	CHAN #1 (DO NOT GND IF NOT USED)
28	CHA2/	INPUT	ENCODER A CH. NEGATIVE	CHAN #2 (DO NOT GND IF NOT USED)
29	DAC3	OUTPUT	ANA. OUT POS. 3	+/-10V TO AGND
30	DAC4	OUTPUT	ANA. OUT POS. 4	+/-10V TO AGND
31	DAC3/	OUTPUT	ANA. OUT NEG. 3	+/-10V TO AGND
32	DAC4/	OUTPUT	ANA. OUT NEG. 4	+/-10V TO AGND
33	AENA3/DIR3	OUTPUT	AMP-ENA/DIR. 3	JUMPERABLE POLARITY (E17C)
34	AENA4/DIR4	OUTPUT	AMP-ENA/DIR. 4	JUMPERABLE POLARITY (E17D)
35	FAULT3	INPUT	AMP-FAULT 3	PRGMBLE POLARITY (Ix25)
36	FAULT4	INPUT	AMP-FAULT 4	PRGMBLE POLARITY (Ix25)
37	+LIM3 **	INPUT	NEG END LIMIT 3	FAILSAFE HIGH TRUE
38	+LIM4 **	INPUT	NEG END LIMIT 4	FAILSAFE HIGH TRUE
39	-LIM3 **	INPUT	POS END LIMIT 3	FAILSAFE HIGH TRUE
40	-LIM4 **	INPUT	POS END LIMIT 4	FAILSAFE HIGH TRUE
41	HMFL3	INPUT	HOME-FLAG 3	PRGMBLE POLARITY (I912)
42	HMFL4	INPUT	HOME-FLAG 4	PRGMBLE POLARITY (I917)
43	DAC1	OUTPUT	ANA. OUT POS. 1	+/-10V TO AGND
44	DAC2	OUTPUT	ANA. OUT POS. 2	+/-10V TO AGND
45	DAC1/	OUTPUT	ANA. OUT NEG. 1	+/-10V TO AGND
46	DAC2/	OUTPUT	ANA. OUT NEG. 2	+/-10V TO AGND
47	AENA1/DIR1	OUTPUT	AMP-ENA/DIR. 1	JUMPERABLE POLARITY (E17A)
48	AENA2/DIR2	OUTPUT	AMP-ENA/DIR. 2	JUMPERABLE POLARITY (E17B)
49	FAULT1	INPUT	AMP-FAULT 1	PRGMBLE POLARITY (Ix25)
50	FAULT2	INPUT	AMP-FAULT 2	PRGMBLE POLARITY (Ix25)
51	+LIM1 **	INPUT	NEG END LIMIT 1	FAILSAFE HIGH TRUE
52	+LIM2 **	INPUT	NEG END LIMIT 2	FAILSAFE HIGH TRUE
53	-LIM1 **	INPUT	POS END LIMIT 1	FAILSAFE HIGH TRUE
54	-LIM2 **	INPUT	POS END LIMIT 2	FAILSAFE HIGH TRUE
55	HMFL1	INPUT	HOME-FLAG 1	PRGMBLE POLARITY (I902)
56	HMFL2	INPUT	HOME-FLAG 2	PRGMBLE POLARITY (I907)
57	FEFCO/	INPUT	FE/WATCHDOG OUT	SEE JUMPER E28
58	AGND	INPUT	ANALOG COMMON	
59	A+15V/OPT+V	INPUT	ANALOG +15V SUPPLY	
60	A-15V	INPUT	ANALOG -15V SUPPLY	

The J8 connector is used to connect PMAC to the first 4 channels (Channels 1, 2, 3, and 4) of servo amps, flags, and encoders.

* Note: In stand-alone applications, these can be used as +5V power supply inputs to power PMAC's digital circuitry

** Note: Pins marked *-LIMn* should be connected to switches at the *positive* end of travel. Pins marked *+LIMn* should be connected to switches at the *negative* end of travel.

J5 JOPT (34-Pin Connector)

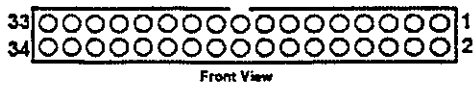

PIN #	SYMBOL	FUNCTION	DESCRIPTION	NOTES
1	MI8	INPUT	MACHINE INPUT 8	LOW IS TRUE
2	GND	COMMON	PMAC COMMON	
3	MI7	INPUT	MACHINE INPUT 7	LOW IS TRUE
4	GND	COMMON	PMAC COMMON	
5	MI6	INPUT	MACHINE INPUT 6	LOW IS TRUE
6	GND	COMMON	PMAC COMMON	
7	MI5	INPUT	MACHINE INPUT 5	LOW IS TRUE
8	GND	COMMON	PMAC COMMON	
9	MI4	INPUT	MACHINE INPUT 4	LOW IS TRUE
10	GND	COMMON	PMAC COMMON	
11	MI3	INPUT	MACHINE INPUT 3	LOW IS TRUE
12	GND	COMMON	PMAC COMMON	
13	MI2	INPUT	MACHINE INPUT 2	LOW IS TRUE
14	GND	COMMON	PMAC COMMON	
15	MI1	INPUT	MACHINE INPUT 1	LOW IS TRUE
16	GND	COMMON	PMAC COMMON	
17	MO8	OUTPUT	MACHINE OUTPUT 8	IF SINKING OUT LOW TRUE IF SOURCE OUT HIGH TRUE
18	GND	COMMON	PMAC COMMON	
19	MO7	OUTPUT	MACHINE OUTPUT 7	" "
20	GND	COMMON	PMAC COMMMON	
21	MO6	OUTPUT	MACHINE OUTPUT 6	" "
22	GND	COMMON	PMAC COMMON	
23	MO5	OUTPUT	MACHINE OUTPUT 5	" "
24	GND	COMMON	PMAC COMMON	
25	MO4	OUTPUT	MACHINE OUTPUT 4	" "
26	GND	COMMON	PMAC COMMON	
27	MO3	OUTPUT	MACHINE OUTPUT 3	" "
28	GND	COMMON	PMAC COMMON	
29	MO2	OUTPUT	MACHINE OUTPUT 2	" "
30	GND	COMMON	PMAC COMMON	
31	MO1	OUTPUT	MACHINE OUTPUT 1	" "
32	GND	COMMON	PMAC COMMON	
33	+V	INPUT/ OUTPUT	+V POWER I/O	+V = +5V TO +24V +5V OUT FROM PMAC, +5 TO +24V IN FROM EXTERNAL SOURCE, DIODE ISOLATION FROM PMAC
34	GND	COMMON	PMAC COMMON	

This connector provides means for 8 general purpose inputs and 8 general purpose outputs. Inputs and outputs may be configured to accept or provide either +5 volt or +24 volt signals. Outputs can be be made sourcing with an IC (U11 to UDN2981) and jumper (E1 & E2) change. E7 controls whether the inputs are pulled up or down internally.

5.4 Linear Actuators

The following explains how to maintain the linear actuators used for the X & Y drives systems of the XL 5000. See the maintenance schedule for the proper intervals.

A. Lubrication: Position the carrier at the middle of the rail and release the band locks at each end cap. Lift the sealing band and lay a line of grease along the entire length of the slot and then distribute the grease to the inside of the profile. Move the carrier slowly a few times along the entire length of the stroke and refit the band and band locks.

NOTICE
Use ISOFLEX TOPAS AK50 or equivalent for lubrication.

B. Checking belt tension: Move the carrier to the drive side of the actuator and release the band lock so that the outer band can be lifted to disclose the slot between the carrier mounting and drive side. Move the carrier to the middle of the rail. To check the tension, push the timing belt down 1/2".

C. Adjusting belt tension: Unscrew the stop screw at the center of the end cap on the drive side of the acutator and adjust the belt by turning the adjustment screws to loosen or tighten as needed. Clockwise tightens the belt. Counter clockwise loosens the belt.

NOTICE
Very small adjustments of the screws are required to affect the tension of the belt.

D. Replacing the timing belt: Remove the coupling from the drive shaft of the actuator so that it is free from the system. Unscrew the adjustment screws from the drive side and the screws of the band lock. Unscrew the 4 screws attaching the end cap to the profile and pull/push out the end cap, belt, carrier and belt-wheel unit from the profile.

Position the carrier on the side to remove the tension pin. Use a pin punch to drive out one of the pins and release the belt mount from the carrier (One pin will be left in the belt mount). Repeat for the other belt mount and remove the clamping plate to remove the belt.

Cut the new timing belt to the correct length, making the cut in the gap between the apex of two gear teeth. Insert the belt underneath the magnet housing, through the X-rings, on/over the belt wheels in the bearing units and again through the X-rings. Mount the clamp and clamping plate on the ends of the belt. Position the belt so that 6-9 teeth are meshing with the clamping plate and tighten down plate to belt. Position the the carrier on the side and replace the the removed tension pin.

Take the pre-assembled belt transmission and insert the belt-wheel unit of the drive side into the extrusion. Move the belt-wheel unit via the slot into its position at the drive side and align the carrier with support rings and bearing strips.

NOTICE
Ensure the belt does not twist or fold and that the recess and shaft journal are on the same side.

Replace the end cap and tension the belt as described in "Adjusting belt tension".

5.5 Replacement Parts

XL 5000 EAGLE Computer Quilter
Parts List
Electronics

Item Description	Item Number	Qty	List Price/Unit
Electronic Panel	XL5301	1.0	$113.85
3" x 1" Wire Duct	XL5302	15.0	$16.80
Fan	XL5303	2.0	$17.94
Fan Cover	XL5304	2.0	$1.47
X/Z 800w Servo Amplifier	XL5305	2.0	$2,839.98
Y 400w Servo Amplifier	XL5306	1.0	$2,511.78
Terminal Block	XL5307	12.0	$3.00
Terminal Block Jumper	XL5308	9.0	$1.62
Fuse Block	XL5309	8.0	$0.63
Line Filter	XL5310	1.0	$456.90
Input Relay	XL5311	8.0	$32.34
Output Relay	XL5312	8.0	$38.67
Input/Output Board	XL5313	1.0	$229.53
24vdc Power Supply	XL5314	1.0	$99.60
15vdc Power Supply	XL5315	1.0	$119.52
Light Transformer	XL5316	1.0	$49.50
60 Pin Connector	XL5317	1.0	$354.36
Din Rail	XL5318	2.0	$41.25
Inhibit Relay Base	XL5319	3.0	$14.10
Inhibit Relay Tube	XL5320	3.0	$25.32
1 CN Servo Cable	XL5321	3.0	$208.08
YServo Power Cable 15m	XL5322	1.0	$377.52
XServo Power Cable 10m	XL5323	1.0	$302.43
ZServo Power Cable 5m	XL5324	1.0	$227.37
YServo Encoder Cable 15m	XL5325	1.0	$527.67
XServo Encoder Cable 10m	XL5326	1.0	$401.10
ZServo Encoder Cable 5m	XL5327	1.0	$334.62
20 amp Fuse	XL5328	2.0	$6.00
10 amp Fuse	XL5329	6.0	$6.00
Isolation Transformer	XL5330	1.0	$705.00
Color Touchscreen Monitor	XL5331	1.0	$2,293.50
On/Off Cam Switch	XL5332	1.0	$63.75
486 Computer	XL5333	1.0	$2,145.00
Computer Controller Board	XL5334	1.0	$7,876.71
60 Pin Ribbon Cable	XL5335	1.0	$60.00
32 Pin Ribbon Cable	XL5336	1.0	$30.00
Handy Box/Cover	XL5337	1.0	$9.36
Main Power Name Plate	XL5338	1.0	$20.97
X Amplifier Name Plate	XL5339	1.0	$20.97
Y Amplifier Name Plate	XL5340	1.0	$20.97
Z Amplifier Name Plate	XL5341	1.0	$20.97
Input/Output Board Name Plate	XL5342	1.0	$20.97
Fuse Block Name Plate	XL5343	1.0	$20.97
60 Pin Connector Name Plate	XL5344	0.0	$20.97
Phone Jack	XL5345	0.0	$0.00
	XL5346	0.0	$0.00
	XL5347	0.0	$0.00
	XL5348	0.0	$0.00
	XL5349	0.0	$0.00
	XL5350	0.0	$0.00

ER8 Bearing	XL5251	6.0	$42.90
ER10 Bearing	XL5252	5.0	$42.90
O" Ring	XL5253	16.0	$0.45
L090 16mm Hub	XL5254	1.0	$11.91
L090 Spider	XL5255	1.0	$10.47
L090 5/8" Hub	XL5256	1.0	$11.91
Sewhead Coupling 5/8" Hub	XL5257	1.0	$13.32
Sewhead Coupling Spider	XL5258	1.0	$8.43
Sewhead Coupling 7/8" Hub	XL5259	1.0	$13.32
Base Coupling 5/8" Hub	XL5260	1.0	$10.77
Base Coupling Spider	XL5261	1.0	$9.30
Base Coupling 10mm Hub	XL5262	1.0	$10.77
Pfaff Timing Pulley Upper	XL5263	1.0	$269.55
Pfaff Timing Pulley Lower	XL5264	1.0	$0.00
Pfaff Timing Belt	XL5265	1.0	$64.83
Double Ear End Cap	XL5266	3.0	$27.54
Single Ear End Cap	XL5267	1.0	$27.54
Pressure Cup	XL5268	1.0	$11.94
Pressure Foot Lifter Cylinder	XL5269	1.0	$46.26
Cylinder Bracket	XL5270	1.0	$4.26
Throat Plate	XL5271	1.0	$7.77
X Servo Motor Plate	XL5272	1.0	$43.77
Y Servo Motor Plate	XL5273	1.0	$37.14
Z Servo Motor Plate	XL5274	1.0	$40.38
Sewhead Upper Drive Shaft	XL5275	1.0	$95.25
Sewhead Lower Drive Shaft	XL5276	1.0	$95.25
Start Name Plate	XL5277	1.0	$20.97
Stop Name Plate	XL5278	1.0	$20.97
Home Name Plate	XL5279	1.0	$20.97
Sewing On/Off Name Plate	XL5280	1.0	$20.97
Restart Name Plate	XL5281	1.0	$20.97
Frame Lock Name Plate	XL5282	1.0	$20.97
	Xl5283	0.0	$0.00
	XL5284	0.0	$0.00
	XL5285	0.0	$0.00
	XL5286	0.0	$0.00
	XL5287	0.0	$0.00
	XL5288	0.0	$0.00
	XL5289	0.0	$0.00
	XL5290	0.0	$0.00

XL 5000 EAGLE Computer Quilter
Parts List
Assembly/Bridge

Item Description	Item Number	Qty	List Price/Unit
Oil Indicator	XL5001	1.0	$23.61
Door Tape	XL5002	0.5	$13.20
Cam Lock	XL5003	4.0	$26.04
3 1/2" Machinery Mount	XL5004	8.0	$26.40
Thread Stand	XL5005	1.0	$19.80
Thread Sensor	XL5006	1.0	$188.10
Light	XL5007	1.0	$118.80
3" X 3" Wire Duct	XL5008	3.0	$12.66
3" Wire Duct Cover	XL5009	3.0	$2.55
1" Pillow Block	XL5010	2.0	$56.10
28 Tooth Timing Pulley	XL5011	1.0	$94.95
SDS Taper Bushing	XL5012	1.0	$28.29
X-Drive Shaft 24"	XL5013	1.0	$11.34
Timing Belt	XL5014	1.0	$38.25
Valve Block	XL5015	1.0	$726.00
Oil Injector	XL5016	1.0	$269.61
Oil Container	XL5017	1.0	$12.87
Oil Container Holder	XL5018	1.0	$6.33
Grounding Buss Bar	XL5019	2.0	$9.90
Air Regulator	XL5020	1.0	$28.02
Air Filter	XL5021	1.0	$39.12
Air Gauge	XL5022	1.0	$15.93
Chase Nipple	XL5023	1.0	$6.00
Air Manifold	XL5024	1.0	$15.75
Flow Control	XL5025	1.0	$75.75
Thread Guide	XL5026	1.0	$26.37
Nylatrack Shelf	XL5027	1.0	$34.17
Large Nylatrack Bracket	XL5028	2.0	$12.54
Large Nylatrack	XL5029	10.0	$46.20
Conduit Connector	XL5030	4.0	$28.38
Conduit	XL5031	10.0	$6.36
Coupling Sprocket	XL5032	10.0	$57.45
16mm Taper Bushing	XL5033	6.0	$28.59
1" Taper Bushing	XL5034	4.0	$28.59
Coupling Chain	XL5035	5.0	$30.30
Coupling Cover	XL5036	5.0	$99.12
Aluminum Extrusion Middle	XL5037	1.0	$370.59
Aluminum Extrusion Back	XL5038	1.0	$399.63
Aluminum Extrusion Front	XL5039	1.0	$318.33
X Linear Actuator Middle	XL5040	1.0	$2,382.60
X Linear Actuator Back	XL5041	1.0	$2,382.60
X Linear Actuator Front	XL5042	1.0	$3,088.80
X Linear Actuator Dummy	XL5043	2.0	$993.30
Y Linear Actuator Right	XL5044	1.0	$2,082.30
Y Linear Actuator Left	XL5045	1.0	$2,082.30
M32 Type 8 Mounts	XL5046	8.0	$26.40
M50 Type 7 Mounts	XL5047	4.0	$50.82
M50 Type 8 Mounts	XL5048	11.0	$45.87
Side Plates	XL5049	2.0	$58.41
Letter	XL5050	1.0	$20.97

Valve Block Name Plate	XL5051	1.0	$20.97
Oil Indicator Name Plate	XL5052	1.0	$20.97
Made in USA Label	XL5053	2.0	$5.37
Thread Label	XL5054	3.0	$8.94
Indentification Plate	XL5055	1.0	$7.47
Paint	XL5056	1.0	$126.00
Activator	XL5057	1.0	$165.00
Thinner	XL5058	1.0	$66.00
	XL5059	0.0	$0.00
	XL5060	0.0	$0.00
	XL5061	0.0	$0.00
	XL5062	0.0	$0.00
	XL5063	0.0	$0.00
	XL5064	0.0	$0.00
	XL5065	0.0	$0.00

XL 5000 EAGLE Computer Quilter
Parts List
Drive Systems

Item Description	Item Number	Qty	List Price/Unit
2 1/2" Machinery Mount	XL5201	18.0	$19.80
10: 1 Gearbox Y-axis	XL5202	1.0	$1,415.70
10: 1 Gearbox X-axis	XL5203	1.0	$1,541.10
800w Servo Motor	XL5204	2.0	$2,121.39
400w Servo Motor	XL5205	1.0	$1,623.75
14 Tooth Timing Pulley	XL5206	1.0	$46.86
JA Taper Bushing	XL5207	1.0	$17.82
Front X Drive Shaft	XL5208	1.0	$56.73
Back X Drive Shaft	XL5209	1.0	$68.10
Left Y-Rail	XL5210	1.0	$318.15
Right Y-Rail	XL5211	1.0	$318.15
1" x 3" Wire Duct	XL5212	15.0	$8.97
1" x 1" Wire Duct	XL5213	2.0	$3.45
1" Wire Duct Cover	XL5214	2.0	$1.08
Small Nylatrack Bracket	XL5215	6.0	$11.55
Small Nylatrack Bracket Mount	XL5216	1.0	$3.15
Small Nylatrack	XL5217	20.0	$39.60
Nylatrack Angle Shelf	XL5218	1.0	$18.15
L Bracket	XL5219	2.0	$3.66
Left Frame Lock Pusher	XL5220	1.0	$6.33
Right Frame Lock Pusher	XL5221	1.0	$6.33
Frame Lock Air Cylinder	XL5222	2.0	$119.37
Frame Lock Foot Mount	XL5223	4.0	$6.48
Red Push Button	XL5224	1.0	$35.52
Green Push Button	XL5225	1.0	$15.78
Black Push Button	XL5226	3.0	$15.78
Toggle Switch	XL5227	2.0	$28.92
Contact Block	XL5228	6.0	$26.31
Start/Stop Station	XL5229	1.0	$10.44
2 1/2" uhmw Tape	XL5230	76.0	$2.07
Y Rail Overtravel Stop	XL5231	2.0	$5.43
Overtravel Switch	XL5232	6.0	$10.50
Front Y Overtravel Bracket	XL5233	1.0	$1.59
Back Y Overtravel Bracket	XL5234	1.0	$1.59
X Overtravel Bracket	XL5235	1.0	$4.77
X Overtravel Bracket Mount	XL5236	1.0	$21.12
L070 10mm Hub	XL5237	1.0	$8.61
L070 Spider	XL5238	1.0	$7.17
L070 16mm Hub	XL5239	1.0	$8.61
QR 10mm Hub	XL5240	2.0	$42.90
QR Spider	XL5241	2.0	$39.60
QR 5/8" Hub	XL5242	2.0	$42.90
UHMW Drive Bushing	XL5243	2.0	$36.72
Y Square Shaft Drive Tube	XL5244	1.0	$245.46
15" Square Drive Shaft	XL5245	1.0	$26.67
65" Square Drive Shaft	XL5246	4.0	$106.80
Base Casting	XL5247	2.0	$183.78
Pfaff Mounting Block	XL5248	1.0	$178.20
Pfaff Sewing Machine	XL5249	1.0	$8,873.70
Grommet	XL5250	7.0	$10.41

SECTION 6: Troubleshooting

6.0 Troubleshooting Guide

Proper troubleshooting begins and ends with a logical approach. Successfully isolating the fault is a diligent process of elimination. Failing to follow a procedure often results in time-consuming errors and an incorrect diagnosis. Turn OFF the power if possible. Use extreme caution when working in or around equipment that is engergized. Handle any electronic parts using static handling procedures.

Follow a procedure:

A. Symptom recognition.
B. Symptom elaboration.
C. List probable faulty functions.
D. Localizing the faulty function.
E. Localizing trouble to the circuit.
F. Failure analysis.

Questions to ask yourself when troubleshooting:

A. What is really wrong?
B. How is the problem apparent?
C. Is it always that way?
D. If intermittent, under what conditions?
E. Was there any abuse? (heat, vibration, contamination, etc.)
F. Did the problem occur suddenly or gradually?
G. Did the problem occur during operation?
H. Does the problem affect other functions?
I. Any additional details?
J. Has anyone tried to fix it? If so, how?

6.1 Diagnostic Chart

The following lists possible difficulties that may be experienced and the procedures to be followed to correct them.

NOTICE
If you have a problem and after following the guidelines above, the problem still exists, call ABM International at 847-581-0011 immediately for assistance.

SECTION 7: Terminology

SECTION 8: Limited Warranty

SECTION 9: Supplemental Information

How to install XL5000 files

Use disc #1- latest files for XL5000

The important files are:

(1) security.dat This file should be copied to the c:\deltatau directory:

c:>copy A:security.dat C:\deltatau

This file contains the latest set-up file for the Pmac card. The plc routines and other variables.

It may already exist on this directory, if so then double check byte size and date for accuracy.

(2) ABMXL299.exe This file would be the latest version of our software. It may be a different name Ex. ABMXL310.exe as the versions change. This file would be copied to the c:\ABM directory:

C:>copy A:ABMXL299.exe C:\ABM\ABMXL.exe

Note: the above transfer command copies and renames the file to the corect operating file name.

(3) SCALE.cfg This file is necessary for proper boot-up of the ABMXL program. It probably exists in the directory but must be checked for bytes and date. It must not be 0 bytes. If necessary copy the file to the c:\ABM directory :

C:>copy A:scale.cfg C:\ABM

Make sure touchscreen is operational: Best way is to exit out of ABM program after boot-up.

Transfer to the deltatau directory. C:>CD Deltatau

C:\Deltatau>PE3

In the Pmac system:

Close the position and watch windows. In the edit window clear the system out:

```
$$$***
save
m0->*
m0..1023=0
p0..1023=0
q0..1023=0
save
define ubuffer 256
save
```

Now go to the back-up window and restore the security file.

save

You can now tune the system. After tuning remember to save this new back-up file. use the name abmcnfga.dat for the first save. Future saves would change the last letter. ex. abmcnfgb.dat

Importante

● Durante le prime due settimane fare funzionare la macchina solo a 3/4 della velocità massima.

● Prima di estarre il tessuto assicurarsi che la leva tirafilo sia nella posizione piu alta (nelle macchine con -900/. . la leva tirafilo viene portata automaticamente nella posizione più alta).

● Per evitare guasti, bisogna pulire la macchina regolarmente (pag. 22) e osservare le istruzioni per la lubrificazione (pag. 5).

Norme di sicurezza

● E' vietato utilizzare la macchina altro che per il suo scopo. In caso di trasformazione in un'altra versione, si dovranno rispettare tutte le norme di sicurezza valide.

● E' vietato adoperare la macchina senza i dispositivi di sicurezza montati da fabbrica.

● La macchina soltanto dovrà essere manovrata dalla persona istruita a questo scopo.

● Prima di cambiare organi di cucitura (ago, piedino, placca d'ago, griffa, spolina, ecc.), e prima d'infilare l'ago, eseguire lavori di manutenzione o lasciare il posto di lavoro, bisogna disinserire la macchina elettricamente con l'interruttore principale oppure togliendo la spina dalla rete.
Nelle macchine con motore a frizione di comando meccanico bisogna aspettare l'arresto del motore.

● Per effettuare lavori di manutenzione e riparazione su dispositivi pneumatici bisogna disinserire prima la macchina dalla rete d'alimentazione pneumatica. Si eccettuano soltanto i lavori di regolazione e controllo eseguiti da lavoratori specializzati.

● I lavori sull'equipaggiamento elettrico dovranno essere eseguiti soltanto da elettricisti specializzati o persone istruiti a questo scopo.
E'vietato lavorare su pezzi o dispositivi che si trovano sotto tensione, salvo nei casi previsti nella norma DIN 57 105 o VDE 0105.

Observações importantes

● Durante as primeiras 2 semanas de trabalho, a máquina não deverá rodar mais de 3/4 da sua velocidade máxima.

● Ao retirar o material de costura, coloque sempre o levantador do fio na posição superior (em máquinas com -900/. . o posicionamento do levantador em posição superior ocorre automaticamente).

● Para evitar avarias, limpe a máquina com regularidade (pág. 22) e observe as instruções de lubrificação (pág. 5).

Normas de segurança

● Utilize a máquina sòmente nos trabalhos para os quais ela foi prevista. Transformando-a em outro tipo, observe todas as normas de segurança vigentes.

● Não é permitida a utilização da máquina sem os dispositivos de proteção, com os quais ela é expedida da fábrica.

● A máquina deverá ser ligada e operada sòmente por uma pessoa devidamente treinada.

● Quando da troca de alguma ferramenta de costura, p.ex. agulha, calcador, chapa de agulha, arrastador e bobina, durante a colocação de fio, afastamento do local de trabalho do operador ou operações de manutenção, a máquina deve ser desligada da corrente elétrica, isto é, desligar a chave geral ou tirando o plug da tomada da rede. Em motores de acoplamento mecânico deve-se esperar a paragem do motor.

● Quando de trabalhos de manutenção ou conserto em instalações pneumáticas, a máquina deve ser desligada do sistema pneumático. Exceções são admitidas somente em trabalhos de ajustagem ou testes de função, realizados por técnicos especializados.

● Trabalhos na instalação elétrica devem ser realizados sòmente por técnicos eletricistas ou pessoas devidamente instruidas. Não é permitido realizar trabalhos em peças ou dispositivos que se encontram sob tensão, salvo nas exceções conforme a norma DIN 57105 ou VDE 0105.

Ölen	Huiler	Lubrificazione
Oiling	**Engrase**	**Lubrificação**

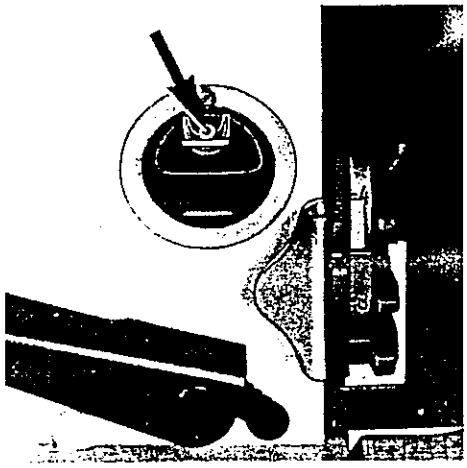

Fig. 1 R 16 291 a

Vor jeder Inbetriebnahme Ölstand kontrollieren und (bei Bedarf) durch die Bohrung (siehe Pfeil in Fig. 1) Öl bis zum oberen Markierungsstrich nachfüllen. Nur Öl mit einer Mittelpunkts-Viskosität von 22,0 mm ^{2}/s bei 40° C und einer Dichte von 0,865 g/cm^3 bei 15° C verwenden. Wir empfehlen Pfaff-Nähmaschinenöl Nr. 280-1-120 144.

Before you start the machine, always check the oil level and, if necessary, top up the reservoir through the hole (see arrow in Fig. 1) with sewing machine oil until the oil level is in line with the upper mark. Only use oil with a mean viscosity of 22.0 mm^2/sec at 40° C and a density of 0.865 g/cm^3 at 15° C. We recommend Pfaff sewing machine oil No. 280-1-120 144.

Avant chaque mise en service, vérifier le niveau de l'huile et, si nécessaire, refaire le plein, jusqu'au repère supérieur, par le trou (flèche, fig. 1). N'utiliser que de l'huile d'une viscosité moyenne de 22,0 mm^2/s à 40° C et d'une densité de 0,865 g/cm^3 à 15° C. Nous recommandons l'huile Pfaff n° 280-1-120 144.

Antes de poner en marcha la máquina, controle siempre el nivel de aceite y, dado el caso, rellene el depósito a través del orifico (véase flecha, fig. 1) con aceite hasta la raya superior de la mirilla. Utilice únicamente aceite de una viscosidad media de 22,0 mm^2/seg. a 40° C y una densidad de 0,865 g/cm^3 a 15° C. Recomendamos aceite Pfaff N° 280-1-120 144.

Controllare il livello dell'olio prima d'ogni messa in funzione e se necessario rabbocare con olio fino alla marcatura superiore, attraverso il foro (vedere freccia in figura 1). Impiegare soltanto olio con una viscosità di 22,0 mm^2/s. a 40° C e una densità di 0,865 g/cm^3 a 15° C. Raccomandiamo olio Pfaff per macchine da cucire N° 280-1-120 144.

Antes de acionar a máquina verificar sempre o nível de óleo e, se houver necessidade, abastecer com óleo até a linha superior do visor, através do orifício (indicado pela flecha na Fig. 1). Usar sòmente óleo com viscosidade média de 22,0 mm^2/seg aos de 40° ecom uma densidade de 0,865 g/cm^3 aos 15°. Recomendamos o óleo Pfaff n° 280-1-120 144.

Einsetzen der Nadel
Inserting the needle
Mise en place de l'aiguille

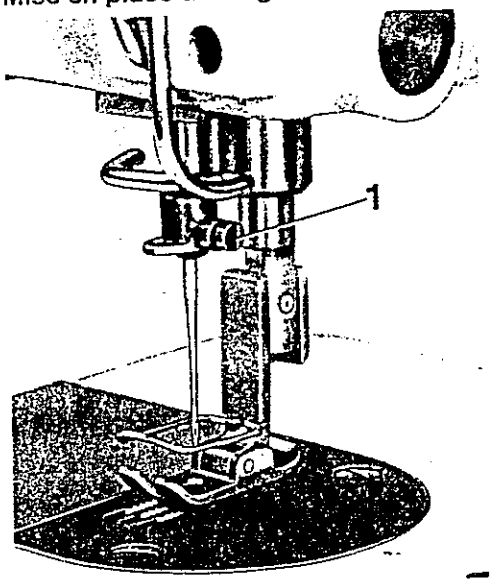

Fig. 2

R 16 292

Colocación de la aguja
Inserimento dell'ago
Colocação da agulha

Achtung:
Ohne Fingerschutz Verletzungsgefahr!

Danger!
Do not operate without finger guard!

Attention:
Sans protège-doigts, risque d'accident!

Atención: No cosa sin salvadedos.
¡Peligro de accidente!

Atenção: Não costurar sem protector de dedos. Perigo de acidentes!

Nadelsystem 134 verwenden.
Nadeldicke siehe Tabelle Seite 11.
Keine angerosteten Nadeln einsetzen.

Spitzenformen sind materialabhängig und können deshalb nicht angegeben werden. Nabelbefestigungsschraube **1** (siehe Fig. 2) lösen. Nadel bis zum Anschlag einsetzen (lange Nadelrille muß dabei nach links zeigen). Nadelbefestigungsschraube **1** wieder festziehen.

Use system 134 needles.
Never use rusty needles.

For needle sizes see table on page 11. Needle point style is dependent on the material and can therefore not be indicated. Loosen needle set screw **1** (Fig. 2). Insert the needle and push it up as far as it will go. (Make sure its long groove faces toward the left.) Tighten needle set screw **1** securely.

N'utiliser que des aiguilles du système 134.
Les aiguilles rouillées sont à proscrire.

Pour la grosseur de l'aiguille, voir le tableau, page 11. La forme de la pointe de l'aiguille est fonction de la matière mise en œuvre et ne saurait donc être précisée. Desserrer la vis de fixation de l'aiguille **1** (fig. 2). Introduire l'aiguille à fond, la rainure longue vers la gauche. Serrer à nouveau la vis de fixation **1**.

Utilicense agujas del sistema 134.
No coloque agujas oxidadas.

El grosor de la aguja y la forma de la punta dependen del material y por esto no pueden indicarse. Afloje el tornillo de fijación **1** de la aguja (véase fig. 2). Introduzca la aguja hasta el tope (la ranura larga de la aguja tiene que señalar hacia la izquierda). Atornille de nuevo, fuertemente, el tornillo de fijación **1**.

Usare il sistema ago 134.
Non impiegare aghi arrugginiti. Per la grossezza dell'ago vedi tabella pag. 11.

La grossezza dell'ago e el forme di punta dipendona dal materiale e perciò non possono essere precisate. Allentare la vite di fissaggio dell'ago **1**. (vedi Fig. 2). Inserire l'ago fino all'arresto (la scanalatura lunga dev'essere rivolta a sinistra). Avvitare nuovamente la vite di fissaggio dell'ago **1**.

Utilize agulhas do sistema 134.
Verifique a grossura da agulha na tabela da pág. 11.

Não coloque agulhas enferrujadas. O formato da ponta da agulha depende do material a costurar, por isso não pode ser pré-determinado. Solte o parafuso de fixação **1** da agulha (veja Fig. 2). Introduza a agulha até ao fundo (a ranhura comprida da agulha deve estar voltada para a esquerda). Aperte novamente, bem firme, o parafuso de fixação **1**.

Einfädeln des Oberfadens
Threading the needle
Enfilage du fil supérieur

Oberfaden nach Fig. 3 einfädeln.
Die Positionen **2-11** geben den Ablauf der Fadeneinfädelung an. Maschine ausschalten. Beim Einfädeln darauf achten, daß der Faden immer von oben durch die drei Bohrungen der Fadenführung **2**, von rechts zwischen die Spannung **3**, von rechts über die Fadenanzugsfeder **4** und von links durch das Nadelöhr geführt wird. Faden ca. 6–7 cm durchziehen. Bei Maschinen mit Fadenabschneideinrichtung -900/. . Vorspannung gemäß nebenstehender Skizze einfädeln!

Thread the needle as illustrated in Fig. 3.
Numbers **2-11** indicate the order of needle threading. Switch off the machine.
Make particularly sure the thread is led from top to bottom through the three holes of thread retainer **2**, from the right between the discs of tension **3**, through the thread check spring **4** and from left to right through the needle eye. Pull abt. three inches of thread through the needle eye.
On machines with thread trimmer -900/. . lead the thread through the thread retainer as shown in the drawing above.

Enhebrado del hilo superior
Infilatura del filo superiore
Colocação do fio superior

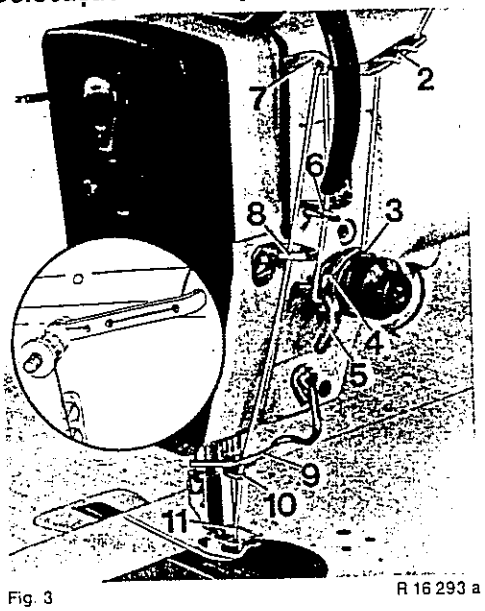

Fig. 3 R 16 293 a

Enfiler le fil d'aiguille selon la figure 3.
Les positions **2** à **11** jalonnent les passages du fil. Mettre la machine hors circuit. A l'enfilage, veiller à toujours introduire le fil d'en haut dans les trois trous du guide-fil **2**, de la droite entre les disques de la tension **3**, de la droite également sous le ressort contrôleur de fil **4** et, de la gauche, par le chas de l'aiguille. Laisser dépasser 6 à 7 cm de fil.
Sur les machines avec coupe-fil -900, enfiler la prétension comme sur le schéma ci-dessus.

Enhebre el hilo superior de acuerdo con la fig. 3.
Las posiciones **2** a **11** indican el recorrido del hilo. Desconecte la máquina.
Nótese que el hilo debe ser conducido siempre desde arriba por los tres agujeros del guiahilos **2**, desde la derecha por entre los platillos tensiores **3** y también desde la derecha por el muelle regulador del hilo **4** y, finalmente, se enhebra la aguja desde la izquierda. Deje un cabo de hilo de 6 a 7 cm.
En máquinas con cortahilos automatico -900/.., enhebre el tensahilos previo conforme al esquema mostrado aquí.

Infilare il filo superiore come si vede in figura 3.
Le posizioni da **2** a **11** indicano il percorso dell'infilatura. Disinserire la macchina.
Nell'infilature badare affinchè il filo venga sempre guidato dall'alto attraverso i tre fori del guidafilo **2**; da destra, tra i due dischi di tensione **3**; da destra attraverso la molla tendifilo **4** e da sinistra attraverso la cruna dell'ago. Tirare il capo del filo per circa 6-7 cm.
Da macchine col rasafili -900/. ., infilare la pretensione come si mostra nello schizzo.

Coloque o fio conforme Fig. 3. As posições **2** a **11** mostram a sequência de colocação do fio. Desligue a máquina. Na colocação do fio, cuide para que este seja enfiado por cima pelos três orifícios do guia-fios **2**; pela direita, entre nos pratos tensores **3**; pela direita, sobrea mola tensora do fio **4** e por último, pela esquerda enfie na agulha. Puxar o fio por mais ou menos 6 – 7 cm.
Em máquinas com corta-fios automático -900/. . enfie a pré-tensão conforme esquema no círculo.

Aufspulen des Unterfadens

Winding the bobbin

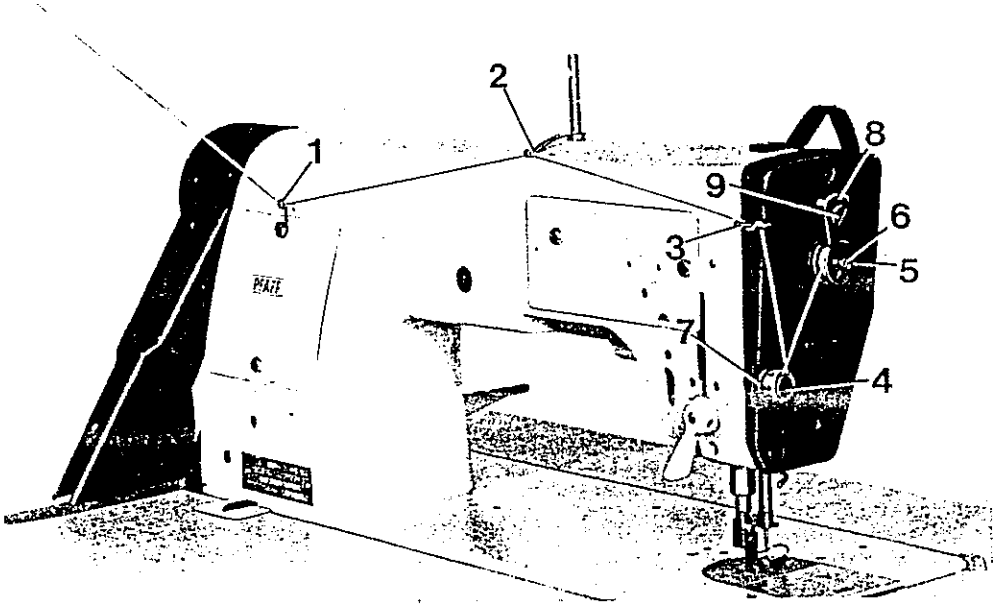

Fig. 4

R 16 294

Den von der Garnrolle kommenden Faden zuerst über die eingezeichneten Positionen **1, 2** und **3** sowie im Uhrzeigersinn um die Spulenfadenspannung **4** führen. Spule **5** auf Spindel **6** stecken und den Faden mit einigen Windungen, ebenfalls im Uhrzeigersinn, aufwickeln. Das Einschalten geschieht bei laufender Maschine durch Niederdrücken des Schaltnockens **8.**
Die Füllmenge der Spule kann nach Lösen der Befestigungsschraube **9** durch Verändern der Höheneinstellung des Schaltnockens **8** korrigiert werden. An der Rändelscheibe **7** wird durch Linksdrehen die Fadenspannung fester bzw. durch Rechtsdrehen loser (siehe Fig. 4).

Lead the thread from the spool down and through thread guides **1, 2** and **3** and clockwise round thread tension **4.** Place bobbin **5** on spindle **6** and wind a few turns on it, again in a clockwise direction. The bobbin winder is engaged while the machine is running by depressing stop latch **8.**
The amount of thread to be wound on the bobbin can be regulated by loosening screw **9** and setting cam **8** higher or lower, as may be required. The thread tension is regulated by turning thumb nut **7** clockwise for a looser tension or counter-clockwise for a tighter tension (Fig. 4).

Bobinage du fil inférieur
Bobinado del hilo inferior
Avvolgimento del filo inferiore
Bobinagem do fio inferior

Enfiler le fil, venant de la bobine, d'abord par les positions **1, 2** et **3**, puis, dans le sens des aiguilles d'une montre, autour de la tension **4.**
Placer la canette **5** sur la broche **6** et enrouler le fil, dans le sens des aiguilles de montre, de quelques tours sur la canette. Embrayer la canette, pendant la marche de la machine, en abaissant la came **8.**
Le remplissage de la canette peut être modifié, après le desserrage de la vis de fixation **9**, par le déplacement vertical de la came **8.**
Pour augmenter la prétension, tourner le disque moleté **7** vers la gauche; le tourner vers la droite pour réduire la tension du fil (fig. 4).

En primer lugar, el hilo procedente del carrete se lleva por las posiciones marcadas **1, 2, 3** y en el sentido de las agujas del reloj por el tensahilos de la bobina **4.** A continuación se coloca la bobina **5** en el husillo **6** y se enrollan unas vueltas de hilo en la bobina en el sentido de las agujas del reloj. La conexión, con la máquina en marcha, se efectúa presionando la leva de mando **8.**
La cantidad de hilo que debe bobinarse puede regularse, después de aflojar el tornillo de fijación **9**, variando el ajuste vertical de la leva de mando **8.** Girando el disco moleteado **7** a la izquierda, la tensión del hilo aumenta; girándolo a la derecha, dicha tensión disminuye (véase fig. 4).

Guidare il filo, proveniente dalla spola filato, prima attraverso le posizioni indicate **1, 2, 3** e poi, in senso orario, attorno al gruppo tensione della spolina **4.** Infilare la spolina **5** sull'asse ed avvolgere alcune spire di filo sempre in senso orario. L'inserimento avviene con macchina in moto per mezzo di pressione sulla leva di commutazione **8.**
La quantità di filo da avvolgere nella spolina può essere variate svitando la vite di fissaggio **9** per cambiare la posizione in altezza della leva di commutazione **8.**
Girando il disco zigrinato **7**, verso sinistra o verso destra, rispettivamente aumenta o diminuisce la tensione del filo (vedi fig. 4).

Em primeiro lugar, coloque o fio que vem do carretel nas posições marcadas **1, 2, 3** e no sentido dos ponteiros do relógio, passando-o no tensor de fio da bobina **4.** Em seguida, coloque a bobina **5** no eixo **6** e enrole algumas voltas de fio na bobina, no sentido dos ponteiros do relógio. A conexão efectua-se com a máquina em movimento pressionando a peça **8** para baixo.
A quantidade de fio a ser bobinado é regulada, posicionando a peça **8** na altura desejada, após soltar o parafuso de fixação **9.**
Girando o disco recartilhado **7** à esquerda, a tensão do fio aumenta; girando à direita, diminui (veja Fig. 4).

Einsetzen der Spulenkapsel
Inserting the bobbin case

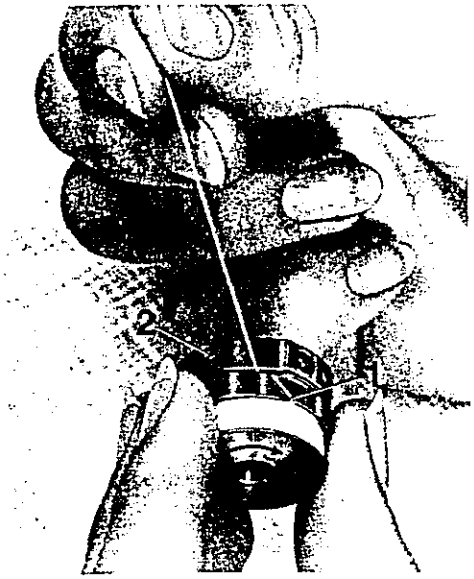

Fig. 5 R 9783 b

Mise en place de la boîte à canette
Colocación de la cápsula de la bobina

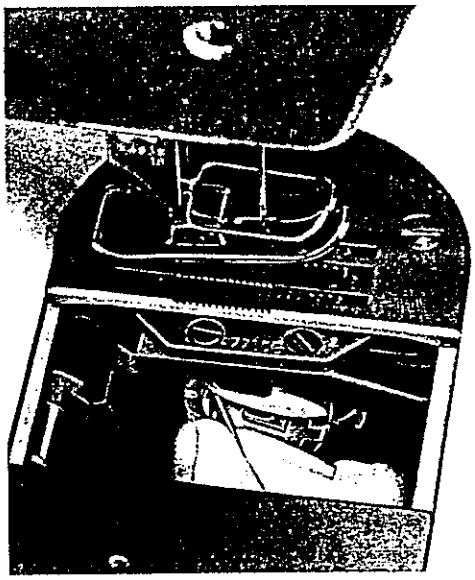

Fig. 6 R 16 301

Die gefüllte Spule so in die Oberkapsel einsetzen, daß der Faden im Uhrzeigersinn abläuft (siehe Pfeil Fig. 5).
Bei leichtem Festhalten der Spule den Faden in den Schlitz **1** einhängen und unter der Spannungsfeder hindurchziehen, bis er hinter der Federzunge **2** wieder hervorkommt. Fadenende ca. 5 cm überstehen lassen. Maschine ausschalten. Durch Drehen am Handrad Fadenhebel in höchste Stellung bringen.
Oberkapsel in Greifer einsetzen (Fig. 6).

Insert the full bobbin into the bobbin case so that when you pull the thread the bobbin turns in a clockwise direction (see arrow in Fig. 5).
Hold the bobbin fast and pull the thread into slot **1** and under the tension spring **2** until it emerges at its rear tip. Pull out abt. 2 inches of thread. Switch off the machine.
Turn the balance wheel to bring the take-up lever to its highest point.
Place the bobbin case into the sewing hook (Fig. 6).

Introduire la canette garnie dans la boîte à canette, de manière que le fil se déroule dans le sens des aiguilles d'une montre (flèche, fig. 5).
Tout en retenant légèrement la canette, faire passer le fil depuis la fente **1** sous le ressort de tension, jusqu'à ce qu'il réapparaisse derrière la languette du ressort **2**. Laisser dépasser environ 5 cm de fil. Mettre la machine hors circuit. Tourner le volant jusqu'à ce que le levier releveur de fil se trouve au point haut de sa course.
Placer la boîte à canette garnie dans le crochet (fig. 6).

Coloque la bobina llena en la cápsula de forma que el hilo corra en el sentido de las agujas del reloj (véase flecha, fig. 5).
Sujetando ligeramente la bobina, enganche el hilo en la ranura **1** y páselo por debajo del muelle tensor hasta que aparezca de nuevo por detrás de la lengüeta elástica **2**, dejando que sobresalga unos 5 cm. Desconecte la máquina. Gire el volante hasta que la palanca tirahilos de halle en su posición superior.
Introduzca la bobina llena en la cápsula y colóquela en el garfio (fig. 6).

Inserimento della capsula

Coloção da cápsula da bobina

■ La spolina piena va inserita nella capsula in modo che il filo scorra in senso orario (vedi freccia fig. 5). Tenendo leggermente la spolina, agganciare il filo nella fessura **1** e tirarlo al di sotto della molla di tensione fino a che non fuoriesce nuovamente dietro la linguetta della molla **2.** Tirare ca. 5 cm di filo fuori. Disinserire la macchina. Girando il volantino, portare il tendifilo nella posizione più alta. Mettere la spolina piena nella capsula ed inserire nel chrochet (fig. 6).

▌ Introduza a bobina cheia na cápsula de tal forma que o fio desenrole no sentido dos ponteiros do relógio (veja Fig. 6 – seta).

Segurando a bobina, passe o fio pela ranhura **1**, por baixo da mola de tensão até que apareça por trás da lingueta da mola **2.** Deixar o fio sobressair por mais ou menos 5 cm. Desligar a máquina. Girando manualmente o volante, ponha o elevador do fio na posição mais alta. Introduza bobina e cápsula na lançadeira (Fig. 6).

Nadel- und Garntabelle
Needle and thread chart
Tableau des aiguilles et fils
Tabla de agujas e hilos
Tabella d'aghi e fili
Tabela de agulhas e fio

Ausführung Model Version Tipo Esecuzione Tipo	Nadeldicke (Nm)** Needle size (Nm)** Grosseur de l'aiguille (Nm)** Grosor de la aguja (Nm)** Grossezza dell'ago (Nm)** Grossura da agulha (Nm)**	Baumwolle Cotton Coton Algodón Cotone Algodão	Seide Silk Soie Seda Seta Seda	Synthetik Synthetic Fil synthétique Sintéticos Materiale sintetico Sintéticos	Leinen Linen Lin Hilo de lino Lino Linho	Nadelsystem Needle system Système d'aiguilles Sistema de agujas Sistema ago Sistema de agulhas
A*	60 70	100–80 70–60	140 120	200–150 180–120		134
B*	80 90 100	60–50 50–40 40–30	100 80 70	120–100 100–80 80–60	70 60	134

*A = für feine Materialien
*B = für mittlere Materialien
**Nm = Nadeldicke in hundertstel mm

*A = for light-weight materials
*B = for medium-weight materials
**Nm = Needle size in hundredths of mm

*A = pour matières fines
*B = pour matières moyennes
**Nm = Grosseur de l'aiguille en $^{1}/_{100}^{e}$ mm

*A = para materiales finos
*B = para materiales semifinos
**Nm = Grosor de la aguja en $^{1}/_{100}$ de mm

*A = Tessuti leggeri
*B = Tessuti medi
**Nm = Grossezza d'ago in $^{1}/_{100}$ mm

*A = para materiais finos
*B = para materiais médios
**Nm = grossura da agulha em $^{1}/_{100}$ de mm

Heraufholen des Unterfadens

Drawing up the bobbin thread

Remonter le fil inférieur

Extracción del hilo inferior

Estrazione del filo inferiore

Extração do fio inferior

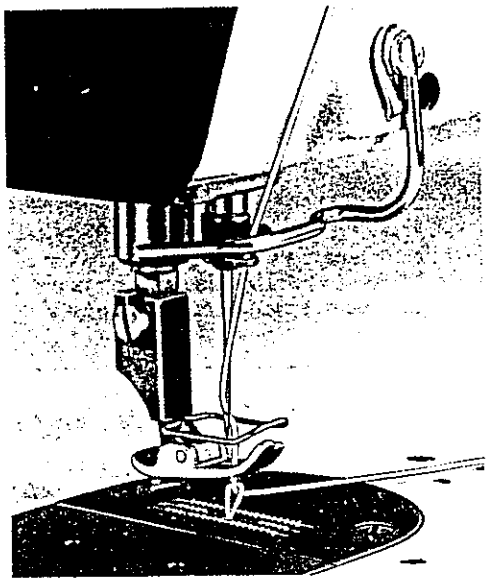

Fig. 7 R 16 296

Maschine ausschalten.
Oberfaden festhalten und das Handrad in Drehrichtung der Maschine drehen, bis der Unterfaden als Schlinge aus dem Stichloch kommt.
Durch Anziehen des Oberfadens den Unterfaden aus dem Stichloch herausziehen. Anschließend beide Fadenenden unter dem Steppfuß nach hinten legen.
(Dieser Arbeitsvorgang entfällt bei Maschinen mit Fadenabschneidvorrichtung -900/. .)

Switch off the machine.
Hold the end of the needle thread and turn the balance wheel in sewing direction until the bobbin thread comes up through the needle hole in a loop.
Pull the needle thread to draw the bobbin thread up through the needle hole. Finally lay both threads back under the presser foot.
(Disregard the above steps if your machine is equipped with a subclass -900/. . thread trimmer.)

Mettre la machine hors circuit.
Tenir le fil supérieur et tourner le volant d'en haut vers soi jusqu'à ce que le fil inférieur paraisse sous forme de boucle par le trou de la plaque à aiguille.
Tendre le fil d'aiguille et tirer ainsi le fil inférieur hors de la plaque. Coucher ensuite les deux fils vers l'arrière, sous la semelle du pied presseur.
(Sur les machines équipées du coupe-fil -900/. ., cette opération est superflue.)

Desconecte la máquina.
Sujete el hilo superior y gire el volante en sentido normal hasta que aparezca el hilo inferior en forma de lazada por el agujero de la placa de aguja.
Tire del hilo superior hasta que haya salido el hilo inferior por el agujero de la placa de aguja. Finalmente coloque las puntas de ambos hilos hacia atrás por debajo del pie prensatelas.
(Esta operación se elimina en máquinas equipadas con el cortahilos automático -900/. .).

Disinserire la macchina.
Tenere fermo il filo superiore e girare il volantino in direzione normale fino a quando il filo inferiore non viene fuori dal foro di cucitura in forma di cappio.
Tirando il filo superiore, estrarre il filo inferiore dal foro di cucitura. Quindi disporre i capi dei fili sotto il piedino verso retro.
(Questa operazione manca nelle macchine con dispositivo rasafili -900/. .).

Deslique a máquina.
Segure o fio superior e gire o volante no sentido da máquina até que o fio inferior apareça no orifício da chapa de ponto, em forma de laçada. Puxe o fio superior até que o inferior passe completamente no orifício.
A seguir, ponha ambas as pontas para trás sob o calcador.
(Esta operação é desnecessária em máquinas com dispositivo cortador de fio -900/. .).

Regulieren der Fadenspannung
Regulating the thread tensions
Réglage de la tension des fils
Regulación de la tensión del hilo
Regolazione della tensione del filo
Regulagem da tensão do fio

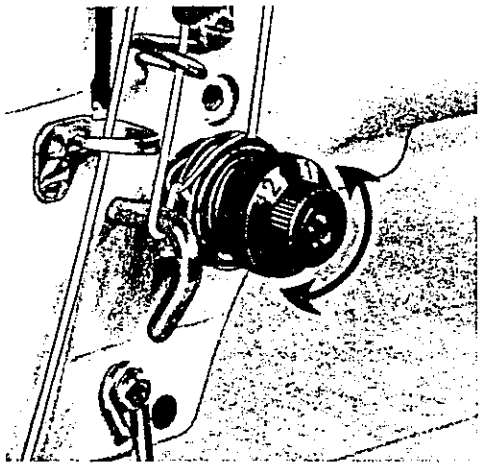

Fig. 8 R 16 293 b

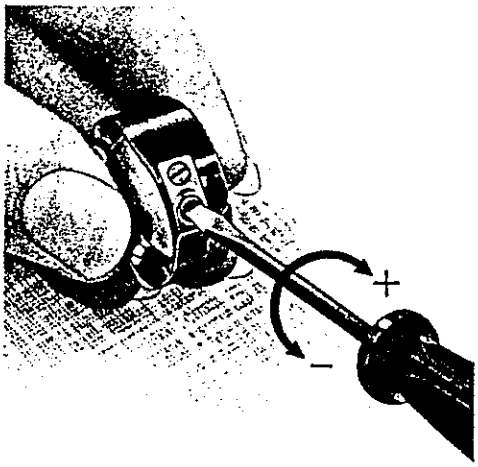

Fig. 9 R 9787

Nach rechts drehen: fester. Nach links drehen: loser

Turn right for a tighter tension. Turn left for a weaker tension.

Rotation à droite: tension plus forte. Rotation à gauche: tension plus faible.

Girando a la derecha: la tensión aumenta. Girando a la izquierda: la tensión disminuye.

Girando a destra: più forte. Girando a sinistra: più leggera.

Girando para a direita: a tensão aumento. Girando para a esquerda: a tensão diminui.

Ober- und Unterfadenspannung so aufeinander abstimmen, daß die beiden Fäden gut eingezogen sind und die Verschlingung in der Mitte des Nähgutes erfolgt.

Regulate both tensions so that the needle and bobbin threads interlock in the center of the material and the stitches are tightly set.

Régler ces tensions de manière que les fils soient bien rentrés et se nouent dans l'ouvrage.

La tensión de ambos hilos tiene que estar regulada de tal forma, que las puntadas queden bien asentadas y la lazada se forme dentro del tejido.

Regolare reciprocamente le tensioni superiore e inferiore in modo che entrambi i fili siano ben tirati proprio in centro del materiale da cucire.

Ajuste a tensão do fio superior e inferior de tal forma que os pontos estejam bem assentados e a laçada se forme dentro do tecido.

Einstellen der Stichlänge
Stitch length regulation
Réglage de la longueur du point
Regulación del largo de puntada
Regolazione della lunghezza punto
Regulagem do comprimento do ponto

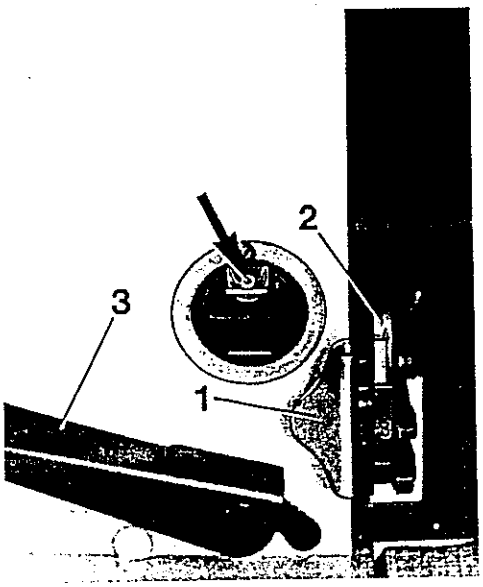

Fig. 10 R 16 291 b

Sperrblech **1** drücken und am Einstellrad **2** gewünschte Stichlänge einstellen.
Zum Rückwärtsnähen Umschalttaste **3** betätigen (siehe Fig. 10).

Press in locking lever **1** and turn control **2** to desired stitch length.
To sew in reverse, operate finger-tip control **3** (see Fig. 10).

Appuyer sur le verrou **1** et tourner le disque de réglage **2** jusqu'à ce que soit obtenue la longueur de point désirée.
Pour la couture en arrière, abaisser le levier **3** (fig. 10).

Presione la chapa de bloqueo **1** y gire el disco regulador **2** hasta obtener el largo de puntada deseado.
Para coser en retroceso presione simplemente la palanca para inversión de costura **3** (fig. 10).

Premere il lamierino di sbarramento **1** e inserire sul volantino di regolazione **2** la lunghezza di punto desiderata.
Per la cucitura in retromarcia azionare il tasto di commutazione **3** (vede fig. 10).

Pressione a chapa de bloqueio **1** e ajuste o ponto no comprimento desejado, girando o disco regulador **2**.
Para costura em retrocesso, acionar a alavanca de inversão **3** (Fig. 10).

Anheben des Stoffdrückerfußes
Lifting the presser foot

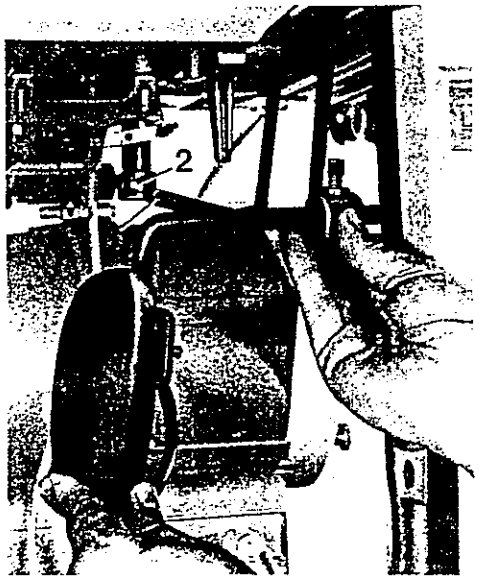

Fig. 11 R 12 888 b

Relevage du pied presseur
Elevación del pie prensatelas
Sollevamento del piedino premistoffa
Elevação do calcador

Zum Anheben des Stoffdrückerfußes Kniehebel nach rechts drücken. Zum Umlegen des Oberteils Maschine ausschalten, den Kniehebel mit einem kleinen Ruck nach vorn abziehen. Beim Einschieben darauf achten, daß der Bolzen **1** in die Nut der Kupplungsmuffe **2** eingreift (siehe Fig. 11).

Raise the presser foot by pressing the knee lever to the right. To tilt back the sewing head, switch off the machine, pull the knee lever sharply towards the front. When mounting the knee lever make sure that pin **1** enters the groove in coupling sleeve **2** (see Fig. 11).

Du genou, pousser la genouillère vers la droite pour lever le pied presseur. Avant de coucher la tête de machine, mettre la machine hors circuit, enlever la genouillère d'un léger coup sec vers l'avant. En remettant la genouillère en place, veiller à ce que le boulon **1** s'engage dans la rainure du manchon **2** (fig. 11).

Para elevar el pie prensatelas presione la palanca de rodilla hacia la derecha. Antes de inclinar la máquina hacia atrás, desconéctela, y quite la palanca de rodilla tirando de ella hacia adelante. Al introducirla, cuídese de que el perno **1** encaje en la muesca del manguito de acoplamiento **2** (véase fig. 11).

Per il sollevamento del piedino premistoffa, premere verso destra la ginocchiella. Disinserire la macchina. Per il ribaltamento della testa tirare un po'in avanti la predetta ginocchiella. Nella spinta, badare che il bullone **1** si inserisca nella scanalatura del manicotto d'innesto **2** (vedi fig. 11).

Para elevar o calcador do tecido, acione a alavanca de joelho para a direita. Para inclinar a máquina, desligue-a e puxe a alavanca de joelho com um pouco deforca para a frente. Ao recolocá-la no lugar, observe que o pino **1** encaixe na ranhura da lu va de acoplamento **2.**

Regulieren des Steppfußdruckes

Regulating the pressure

Réglage de la pression du pied presseur

Regulación de la presión del pie prensatelas

Regolazione della pressione del piedino

Regulagem da pressão do calcador

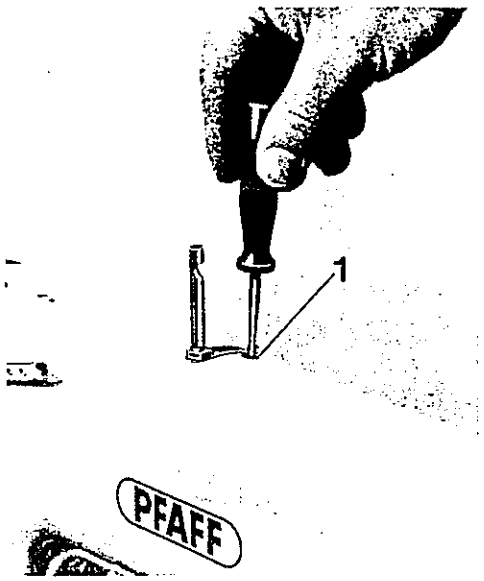

Fig. 12 R 16 303

Durch Rechtsdrehen der Stellschraube **1** wird der Druck auf den Steppfuß verstärkt; durch Linksdrehen entsprechend verringert.

When screw **1** is turned to the right, the pressure on the material is increased. When the screw is turned to the left, it is decreased.

Tourner la vis de réglage **1** vers la droite pour augmenter la pression sur le pied presseur. Par rotation à gauche, cette pression diminue.

Girando el tornillo regulador **1** hacia la derecha, la presión del pie prensatelas aumenta; girándolo hacia la izquierda, dicha presión disminuye.

Girando verso destra la vite di posizionamento **1**, viene aumentata la pressione sul piedino. Girando la vite predetta verso sinistra, si ottiene l'inverso.

Girando o parafuso regulador **1** para a direita, a pressão aumenta; girando à esquerda, diminui.

Kantenbeschneideinrichtung -731/01

Edge trimmer -731/01

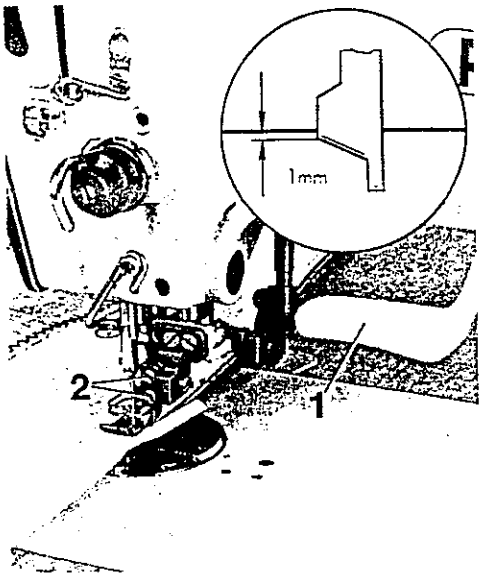

Fig. 13 R 16 298

Dispositif à raser les bords -731/01

Dispositivo recortador -731/01

Dispositivo tagliamargini -731/01

Dispositivo cortador -731/01

Taste **1** nach unten drücken: Schneideinrichtung eingeschaltet. Taste **1** nach oben drücken: Schneideinrichtung ausgeschaltet. **Achtung:** Nicht in das laufende Messer greifen, Verletzungsgefahr!

Messer auswechseln

Motor und Schneideinrichtung ausschalten. Schrauben **2** lösen und Messer auswechseln; das Messer soll im unteren Umkehrpunkt ca. 1 mm unter der Gegenschneide stehen (siehe Kreis).

Push control **1** down: The trimmer is engaged. Push control 1 up: The trimmer is disengaged. **Danger!** Keep fingers away from moving knife!

Changing the knife

Switch off the motor and the edge trimmer. Loosen screw **2** and change the knife. When the knife is at its lowest point, it should be positioned abt. 1 mm below the stationary cutting edge (see encircled view).

Abaisser la touche **1**: couteau embrayé. Pousser la touche **1** vers le haut: couteau débrayé. **Attention:** Ne pas mettre la main dans le couteau en action. Risque d'accident!

Echange du couteau

Arrêter le moteur et débrayer le couteau. Desserrer la vis **2** et sortir le couteau. Le couteau neuf devra, en position basse, se trouver à environ 1 mm plus bas que le contre-couteau (voir médaillon).

Pulsando la palanca **1** hacia abajo, el dispositivo recortador se conecta: pulsándola hacia arriba, se desconecta. **Atención:** No acerque la mano a la cuchilla en marcha. Peligro de accidente!

Cambio de la cuchilla

Desconecte el motor y el dispositivo recortador. Afloje los tornillos **2** y cambie la cuchilla. La nueva cuchilla deberá quedar, en el punto muerto inferior, a 1 mm aprox. por debajo de la contracuchilla (v. circulo).

Per inserire il dispositivo tagliamargini, premere il tasto **1** verso il basso; per disinserirlo, premerlo verso il alto. **Atenzione:** Non toccare il coltello funzionante, rischio d'incidente!

Cambio del coltello

Disinserire il motore ed il dispositivo tagliamargini. Allentare le viti **2** e cambiare il coltello. Cuando il nuevo coltello si trovi nel punto morto inferiore, dovrà restare ca. 1 mm sotto il controcoltello (vedi circolo).

Pressionando a tecla **1** para baixo: o dispositivo cortador está ligado. Pressionando a tecla **1** para cima: o dispositivo está desligado. **Atenção:** Não colocar a mão na faca, em funcionamento. Perigo de acidente!

Troca de facas:

Desligue o motor e o dispositivo cortador. Solte os parafusos **2** e troque a faca; a faca deverá ficar a uma distância de aproximadamente 1 mm abaixo da contrafaca no ponto de inversão inferior (veja círculo).

Funktionen der Tretplatte(n) und Schalter

Functions of pedal(s) and switch

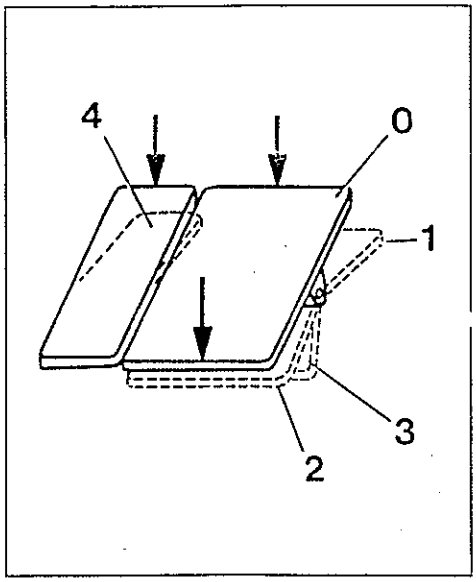

Fig. 14

Nähen bis zur max. Stichzahl: Betätigen der Tretplatte bis Stellung **1**.

Ruhestellung: Zurücknehmen der Tretplatte von Stellung **1** bzw. **2** oder **3** in **0**.

Nähfäden abschneiden (-900/..): Rückwärtsbetätigen der Tretplatte bis Stellung **3**.

Nähfuß anheben (-910/..): Rückwärtsbetätigen der Tretplatte bis Stellung **2** oder **3**, außerdem bei entsprechender Stellung des Kippschalters am Steuerkasten bei jeder Nähunterbrechung (Stellung **0**).

Rückwärtsnähen bzw. Verriegeln (-911/..): Betätigen beider Tretplatten nach vorn in Stellung **1** und **4** **(-911/01). Drücken der Handtaste am Maschinenkopf und Betätigen der rechten Tretplatte bis Stellung 1 (-911/03;/05).**

Automatisches Verriegeln am Nahtanfang bzw. Nahtende (-911/15;/17;/35;/37 und /95): Betätigen der Tretplatte nach vorn in Stellung **1** bzw. nach hinten in Stellung **3**.

Zwischenverriegeln innerhalb der Naht (-911/35;/37;/95): Betätigen der Tretplatte nach vorn in Stellung **1** und Drücken der Handtaste am Maschinenkopf.

Sewing up to max. speed: Press the pedal to position **1**.

Rest position: Depress the pedal from position **1**, **2** or **3**, to **0**.

Cutting the sewing threads (-900/..): Press the pedal backwards to position **3**.

Lifting the presser foot (-910/..): Press the pedal backwards to position **2** or **3**; it is also lifted at the corresponding position of the toggle switch on the control box at each sewing interruption (position **0**).

Reserve sewing or backtacking (-911/..): Press both pedals to positions **1** and **4** **(-911/01).** Press knuckle switch on machine head and press right pedal to position **1** **(-911/03/05).**

Automatic backtacking at beginning and end of seam (-911/15/17/35/37/95): Press pedal forwards to position **1**, or backwards to position **3**.

Intermediate backtacking within seam (-911/35/37/95): Press pedal forwards to position **1**, and actuate knuckle switch on machine head.

Fonctions des pedales et des interrupteurs

Funciones de los pedales e interruptores

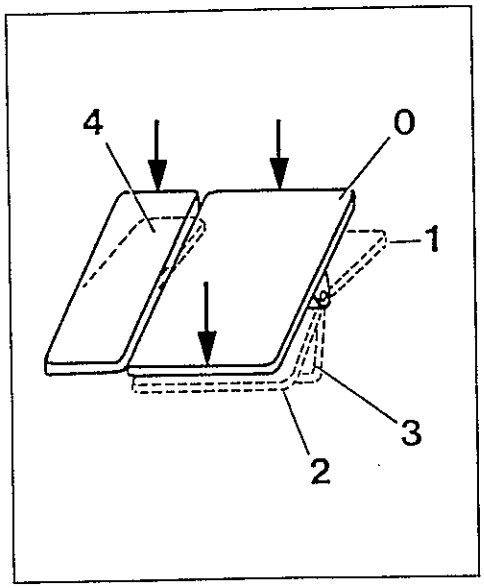

Fig. 14

Couture jusqu'à la vitesse maximale: Abaisser la pédale en position **1.**

Position de repos: Faire revenir la pédale des positions **1, 2** ou **3** en position **0.**

Coupe des fils (-900/..): Talonner la pédale en position **3.**

Relevage du pied (-910/..): Talonner la pédale en position **2** ou **3.** De plus, suivant la position de l'interrupteur à bascule de la boîte du moteur, à chaque interruption de couture (position 0).

Couture en marche arrière et points d'arrêt (-911/..): Abaisser les deux pédales en position **1** et **4 (-911/ 01).** Appuyer sur le manocontact sur la tête de la machine et abaisser la pédale droite en position **1 (-911/03;/05).**

Bridage automatique au début et à la fin de la couture (-911/15;/17;/35;/37 et /95): Abaisser la pédale en position **1** ou la talonner en position **3.**

Arrêts intermédiaires (-911/35;/37;/95): Abaisser la pédale en position **1** et agir sur le manocontact sur la tête de la machine.

Costura hasta la velocidad máxima: Pise el pedal hasta la posición **1.**

Posición neutra: Haga volver el pedal de la posición **1, 2** ó **3** a la posición **0.**

Corte de los hilos (-900/..): Pise el pedal hasta la posición **3.**

Elevación del prensatelas (-910/..): Pise el pedal hasta la posición **2** ó **3.** El prensatelas se eleva además, siempre que el interruptor basculante de la caja de mandos se halle en la posición correspondiente, cada vez que se interrumpa la costura (posición 0).

Costura en retroceso o rematado (-911/..): Con **-911/01:** pise los dos pedales hasta las posiciones **1** y **4.** Con **-911/03** ó **/05:** pulse el microrruptor en la cabeza de la máquina y pise el pedal derecho hasta la posición **1.**

Rematado automático al comienzo y al final de la costura (-911/15,/17,/35,/37 y /95): Pise el pedal hasta la posición **1** ó **3.**

Rematado intermedio (-911/35,/37 y /95): Pise el pedal hasta la posición 1 y pulse el microrruptor en la cabeza de la máquina.

Funzioni dei pedali e del interruttore

Funções dos pedais e da tecla

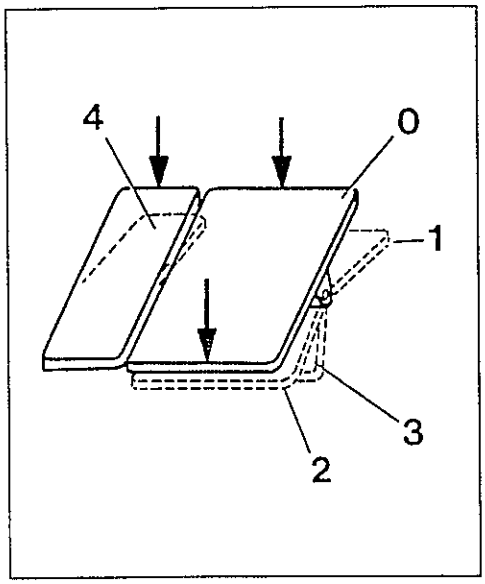

Fig. 14

Cucitura fina alla velocità massima: Abbassare il pedale fino alla posizione **1.**

Posizione di riposo: Mettere indietro el pedale dalle posizioni **1, 2** oppure **3** alla posizione **0.**

Taglio dei fili (-900/..): Abbassare il pedale fino alla posizione **3.**

Sollevamento del piedino (-910/..): Abbassare il pedale fino alla posizione **2** oppure **3.** Il piedino viene alzato anche ad ogni interruzione della cucitura (posizione **0**) secondo la posizione dell'interruttore situato nella cassa di comando.

Cucitura indietro o fermatura della cucitura (-911/..): Con **(-911/01)** abbassare entrambi le pedali alla posizione **1** e **4.** Con **(-911/03, /05)** premere il tasto manuale nella testa della macchina ed abbassare il pedale destro fino alla posizione **1.**

Fermatura automatica al inizio ed al fine della cucitura (-911/15;/17;/35;/37 e /95): Abbassare il pedale fino alla posizione **1** oppure fino alla posizione **3.**

Fermature intermedie della cucitura (-911/35,/37,/95): Abbassare il pedale fino alla posizione **1** e premere il tasto manuale nella testa della macchina.

Costura até à velocidade máxima: pise o pedal até pos **1.**
Posição neutra: retorno do pedal das posições **1, 2** e **3** à **0.**
Corte de fios (-900/. .): pise o pedal para trás até à posição **3.**
Elevação do calcador (-910/. .): Retornar o pedal até à posição **2** ou **3,** Além disso, sempre que o interruptor basculante da caixa de comando estiver na posição correspondente, à cada interrupção de costura (pos. **0**).
Costura em retrocesso ou remate (-911/. .): Pise nos dois pedais posições **1** e **4 (-911/01).** Acione a tecla no cabeçote da máquina e pise o pedal direito até pos. **1 (-911/03; /05).**
Remate automático ao início, e ao final da costura (-911/15; /17; /35; /37 e /95: Pise o pedal acionando para a frente em pos. **1** respectivamente para trás em pos. **3.**
Remate intermediário (-911/35; /37; /95): Pise o pedal para frente na pos. **1** e acione a tecla no cabeçote da máquina.

Riemenschutz
Belt guard

Garde-courroie

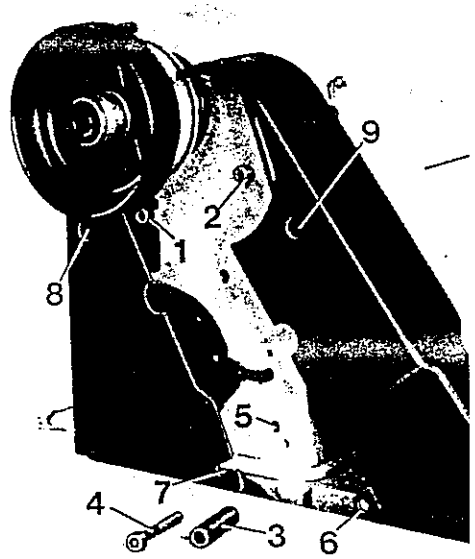

Fig. 15 R 16 297

Achtung: Nicht ohne Riemenschutz betreiben, Unfallgefahr!

Danger! Do not run machine without belt guard!

Attention: Ne pas faire marcher sans garde-courroie. Risque d'accident!

Maschine ausschalten. Riemenschutz wie folgt anschrauben:
Linke und rechte Schutzhälfte mit ihren Schlitzen hinter die Köpfe der Befestigungsschrauben **1** und **2** schieben (siehe Fig. 15). Distanzhülse **3** auf die Befestigungsschraube **4** stecken und die Schraube in die Gewindebohrung **5** eindrehen. Unter Beachtung, daß die Lasche **6** hinter den Schlitz **7** und vor die Distanzhülse **3** kommt, den Riemenschutz ausrichten und die Schraube **4** fest anziehen.
Abschließend durch die Bohrungen **8** und **9** die Schrauben **1** und **2** ebenfalls festziehen.
Riemenschutz unterhalb der Tischplatte so ausrichten, daß sowohl Motorscheibe als auch Keilriemen frei laufen und in dieser Stellung festschrauben.

Switch off the machine. To screw on the belt guard, proceed as follows:
Attach the right and left belt guard sections so that screws **1** and **2** enter the appropriate slots in the back wall of the belt guard (Fig. 15). Push spacing sleeve **3** onto screw **4** and screw this screw into hole **5** a few turns. Make sure lug **6** is positioned behind slot **7** and in front of spacing sleeve **3**, align the belt guard and tighten screw **4** securely. Then tighten screws **1** and **2** which are accessible through holes **8** and **9**.
Align the belt guard section so that the motor pulley and the V-belt move freely. In this position, tighten the wing nut.

Mettre la machine hors circuit. Monter le garde-courroie supérieur comme suit:
Mettre en place les deux parties du garde-courroie en en engageant les fentes derrière les têtes des vis **1** et **2** (fig. 15). Placer la douille d'écartement **3** sur la vis **4** et visser celle-ci dans le trou taraudé **5**.
En veillant à ce que la languette **6** prenne appui derrière la fente **7** et devant la douille **3**, ajuster le garde-courroie et serrer la vis **4**. Pour terminer, bloquer les vis **1** et **2** à travers les orifices **8** et **9**.
Ajuster le garde-courroie **inférieur de manière** que la poulie motrice, aussi bien que la courroie en V, se meuvent librement et le fixer dans cette position.

Guardacorreas
Copricinghia
Proteção da correia

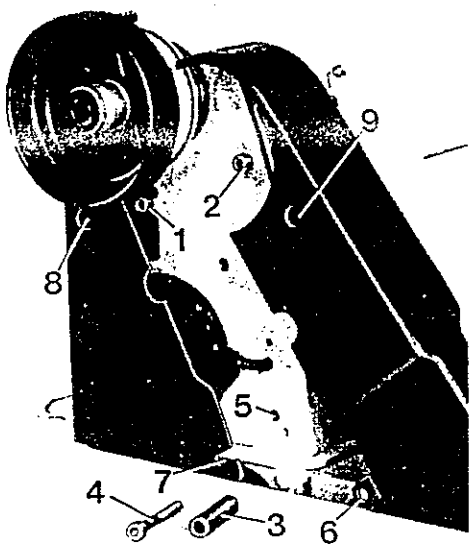

Fig. 15 R 16 297

Atención: No ponga la máquina en marcha sin guardacorreas. ¡Peligro de accidente!

Attenzione: Non far funzionare la macchina senza guardacinghia, rischio d'incidente!

Atenção: Não use a máquina sem proteções de correia. Perigo de acidente!

Desconecte la máquina. El guardacorreas se coloca y atornilla de la forma siguiente:
La mitad izquierda y derecha del guardacorreas se introducen con sus ranuras detrás de las cabezas de los tornillos de fijación **1** y **2** (véase fig. 15). Se introduce el mangiuto distanciador **3** sobre el tornillo de fijación **4** y se atornilla éste en el agujero roscado **5.**
Teniendo cuidado de que la oreja **6** queda detrás de la ranura **7** y delante del manguito distanciador **3**, se alinea el guardacorreas y se aprieta el tornillo **4**. Finalmente, apriete a través de los orificos **8** y **9** los tornillos **1** y **2.**
Coloque el guardacorreas **inferior de forma** que tanto la polea del motor como la correa en «V» marchen libremente y, en esa posición, apriétela fuertemente.

Disinserire la macchina. Avvitare il copricinghia come segue:
Spingere le metà sinistra e destra della protezione con le loro fessure dietro le teste delle viti di fissaggio **1** e **2** (vedi fig. 15). Infilare la boccola distanziatrice **3** sulla vite di fissaggio **4** ed avvitare questa nel foro filettato **5.**
Facendo attenzione che la fascetta **6** arrivi dietro la fessura **7** e davanti la boccola distanziatrice **3**, posizionare il copricinghia e stringere le vite **4.** Finalmente, avvitare le viti **1** e **2 attraverso i fori 8** e **9.**
Posizionare il copricinghia al di sotto della piastra base in modo che, sia la puleggia del motore, sia la cinghia trapezoidale scorrano liberamente, e in questa posizione, avvitare saldamente il copricinghia.

Desligue a máquina. Parafuse a proteção da correia conforme segue: Introduza as metades direita e esquerda do protetor com as ranhuras atrás das cabeças dos parafusos **1** e **2** (Fig. 15). Coloque o tubo distanciador **3** sobre o parafuso de fixação **4**, colocando o parafuso no furo rosqueado **5.**
Observando para que a manilha **6** esteja colocada atrás da fenda **7** e antes do tubo distanciador **3**, alinhe a proteção da correia e aperte o parafuso **4.**
A seguir, pelas furações **8** e **9** aperte os parafusos **1** e **2.**
Embaixo do tampo da mesa, alinhar a proteção da correia de tal maneira que, tanto a polia do motor quanto a correia em V tenham um percurso livre e depois parafuse-a nesta posição.

Inhaltsverzeichnis

	Seite
Zur besonderen Beachtung	2
Sicherheits-Hinweise	2
Ölen	5
Einsetzen der Nadel	6
Einfädeln des Oberfadens	7
Aufspulen des Unterfadens	8
Einsetzen der Spulenkapsel	10
Nadel- und Garntabelle	11
Heraufholen des Unterfadens	12
Regulieren der Fadenspannung	13
Einstellen der Stichlänge	14
Anheben des Stoffdrückerfußes	15
Regulieren des Steppfußdruckes	16
Kantenbeschneideinrichtung -731/01	17
Funktionen der Tretplatte(n) und Schalter	18
Riemenschutz	20
Pflege	24

Contents

	page
Important notes	2
Safety instructions	2
Oiling	5
Inserting the needle	6
Threading the needle	7
Winding the bobbin	8
Inserting the bobbin case	10
Needle and thread chart	11
Drawing up the bobbin thread	12
Regulating the thread tensions	13
Stitch length regulation	14
Lifting the presser foot	15
Regulating the presser foot pressure	16
Edge trimmer -731/01	17
Functions of pedal(s) and switch	18
Belt guard	20
Machine care	24

Table des matières

	Pages
Conseils importants	3
Recommandations de sécurité	3
Huiler	5
Mise en place de l'aiguille	6
Enfilage du fil supérieur	7
Bobinage du fil inférieur	9
Mise en place de la boîte à canette	10
Tableau des aiguilles et fils	11
Remonter le fil inférieur	12
Réglage de la tension des fils	13
Réglage de la longueur du point	14
Relevage du pied presseur	15
Réglage de la pression du pied presseur	16
Dispositif à raser les bords -731/01	17
Fonctions des pédales et des interrupteurs	19
Garde-courroie	21
Entretien	24

Indice

	página
Observaciones importantes	3
Normas de seguridad	3
Engrase	5
Colocación de la aguja	6
Enhebrado del hilo superior	7
Bobinado del hilo inferior	9
Colocación de la cápsula de la bobina	11
Tabla de agujas e hilos	11
Extracción del hilo inferior	12
Regulación de la tensión del hilo	13
Regulación del largo de puntada	14
Elevación del pie prensatelas	15
Regulación de la presión del pie prensatelas	16
Dispositivo recortador -731/01	17
Funciones de los pedales e interruptores	19
Guardacorreas	21
Limpieza y mantenimiento de la máquina	24

Indice

	pag.
Importante	4
Norme di sicurezza	4
Lubrificazione	5
Inserimento dell'ago	6
Infilatura del filo superiore	7
Avvolgimento del filo inferiore	9
Inserimento della capsula	11
Tabella d'aghi e fili	11
Estrazione del filo inferiore	12
Regolazione della tensione del filo	13
Regolazione della lunghezza punto	14
Sollevamento del piedino premistoffa	15
Regolazione della pressione del piedino	16
Dispositivo tagliamargini -731/01	17
Funzioni dei pedali e del interruttore	19
Copricinghia	21
Manutenzione	24

Indice

	página
Observações importantes	3
Normas de segurança	3
Lubrificação	5
Colocação da agulha	6
Colocação do fio superior	7
Bobinagem do fio inferior	9
Colocação da cápsula da bobina	11
Tabela de agulhas e fios	11
Extração do fio interior	12
Regulagem da tensão do fio	13
Regulagem do comprimento do ponto	14
Elevação do calcador	15
Regulagem da pressão do calcador	16
Dispositivo cortador -731/01	17
Funções dos pedais e da tecla	19
Proteções da correia	21
Limpeza e manutenção da máquina	24

Pflege
Machine care
Entretien
Limpieza y mantenimiento de la máquina
Manutenzione
Manutenção da máquina

Mindestens einmal in der Woche die Maschine gründlich reinigen.
Maschine ausschalten.
Greifer und Greiferraum täglich mit einem Pinsel reinigen.

Clean the machine thoroughly at least once a week.
Switch off the machine.
Clean the hook and hook raceway once every day with a soft brush.

Nettoyer, au moins une fois par semaine, la machine à fond.
Mettre la machine hors circuit.
A l'aide d'un pinceau, nettoyer le crochet et ses alentours chaque jour.

La máquina debe limpiarse a fondo, por lo menos, una vez a la semana.
Desconecte la máquina.
El garfio y la zona del mismo debe limpiarse diariamente con un pincel.

Almeno una volta la settimana pulire a fondo la macchina.
Disinserire la macchina.
Pulire giornalmente con un penello il crochet e la sua sede.

Limpar cuidadosamente a máquina, no mínimo uma vez por semana.
Desligar a máquina.
Limpar diariamente com um pincel a lançadeira e o espaço ao redor.

PFAFF®

Pfaff, D 6750 Kaiserslautern
Postfach 30 20 / 30 40, Telefon (06 31) 200-0,
Telex 4 5 753, Telefax (06 31) 1 72 02

Nr. 296-12-16309 deutsch/engl./franz./span./ital./port.

SECTION A

(1) 5140906 Upper face plate cover screw (long)
(2) 5106309 Face plate cover complete with guard
(3) 5106353 Face plate cover thread take-up lever guard
(4) 5106354 Face plate cover screw spacer
(7) 5131 Face plate cover lower screw (short)
(21) 5227 Thread take-up lever guard attachment screws

SECTION B

(6) 5106302 Rear arm cover
(5) 5127 Arm cover screws

SECTION C

(4) 51350435 Pressure bar -pressure regulating screw with extended knob for bridge.
(11) 5106336 Pressure bar spring- long black
(12) 5106394 Pressure bar spring locating pin.
(13) 5276025 Pressure bar tracking ball
(14) 5190 Slack thread regulator attachment screw
(15) 5106342 Slack thread regulator
(16) 5106335 Pressure bar position guide with screw (5158)
(17) 5158 Pressure bar position guide screw
(18) 5276028 Pressure bar lifting lever bracket (optional only on manual quilters)
(23) 51350442 Pressure bar lifter hinge screw (optional only on manual quilters)
(24) 5276117 pressure bar lifter finger (optional only on manual quilters)
(25) 5276536 Pressure bar bushing
(26) 5276241 Pressure bar with screw and ball
(27) 5176 Pressure bar screw
(28) 200039 Small pressure cup
200070 Large pressure cup (option not shown)

SECTION D

(1) 5435 Thread take-up lever link hinge stud set screw
(5) 5106357 Thread take-up lever link hinge stud (with oil wick)
(6) 5106368A Thread take-up lever assembly complete
Individual parts:

Part # 5106368A

(A) Hinge stud bronze bushing #5106368A-1
(B) Side Link #5106368A-2
(C) Thread eylet #5106368A-3
(D) Take-up finger ball bearing #5106368A-4
(E) side link support pin #5106368A-5
(F) Counter weight main stud #5106368A-6
(G) Main link ball bearing #5106368A-7
(H) Main link #5106368A-8
(I) Needle bar stud #5106368A-9
(J) Needle bar stud screw #5140706
(L) Main stud needle bearing #5106368A-10
(M) Needle bar stud Needle bearing #5106368A-11
(N) Take-up Finger #5106368-12
(k) kit containing plastic thrust washers, oil plug, snap ring #5106368A-0

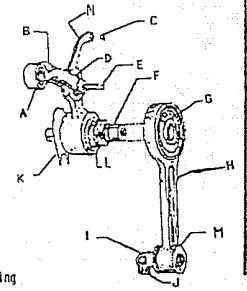

(7) 5106397 Upper oil felt
(8) 5106325 Upper needle bar bushing (older quilters only) **NO oil groove**
5106325-1 Upper needle bar bushing
(All XL quilters and newer manual quilters) **Oil groove**
(9) 200030 Lower oil felt
(10) 5106424-1 Lower needle bar bushing (all quilting machines) with retaining ring
5106424-2 Retaining ring can be used for both upper and lower bushings
(11) 598923 Lower needle bar bushing wire thread guide
(12) 200032 Needle bar with screw
(13) 200032-1 Needle bar set screw
(17) 200033-? Needles
(please check with the factory for application recommendation)
(18) 5106346 Thread eylet and guide
(19) 5106346-1 Thread eylet attachment screw

SECTION E

(1) 5140609 Thread take-up clamping screw (hex head)
(2) 51036 Thread take-up flat alignment set screw (slotted)
(3) 5106304 Main arm shaft front bearing
010002 Rear bearing (not shown)
260001 Adapter bushing for above bearing (not shown)
080001 Flexible coupling for main arm shaft with 260001 and 010002 installed
(4) 5106303 Main counter-weight shaft with 5106303-1 and 5106304
5106303-1 Black counter-weight only

SECTION F

(2) 51654 3-hole thread guide lock nut
(3) 516377 3-hole thread guide
(30) 5448 Tension assembly locking set screw
(31) 5140610 Acess hole plug
(29) 5106374 Tension assembly Rotary disc style
5106374-1 Tension assembly squeeze discs style
5106374-2 Rotary disc for 5106374
5106374-3 Check spring for either tension assembly
5106374-5 Tension assembly- Air Operated for XL quilters with thread cutter

SECTION G

(5) 5106306 Timing pulley upper shaft 5/8"
(6) 5106303-3 Set screws for timing pulleys (upper or lower)
(7) 5106305 Rubber timing belt
(13) 5106307 Timing belt separator

Sewing Head Lower Assembly

(1) 200053 Bobbin case L style
200053-1 Bobbin case - large capacity M style
(3) 200050-1 Screw for bobbin case holder finger
(4) 200050 Bobbin case holder finger
(5) 200043 Hook- plain chrome L style
200043-1 Hook- black teflon coated basket L style
200043-2 Hook- large capacity- M style
(7) 5272229 Hook pump- complete
(8) 5200346 Hook pump holding set screw
(9) 200046 Bed slide
(10) 200041 Ring gear - inside oil resovoir drives hook pump
(12) 200048 Gasket for oil resovoir
(13) 5276246 Oil resovoir cover
(14) 5200346 Set screw to hold ring gear drive shaft bushing in oil reso
(15) 5276244 Resovoir oil drain plug
(16) 200040 Ring gear drive shaft
(17) 010001 Ring gear drive shaft rear bearing
(18) 5114063 Lower timing pulley set screws

ABM INTERNATIONAL, INC.

Sewing Head Upper Assembly
A,B,C,D,E,F,G

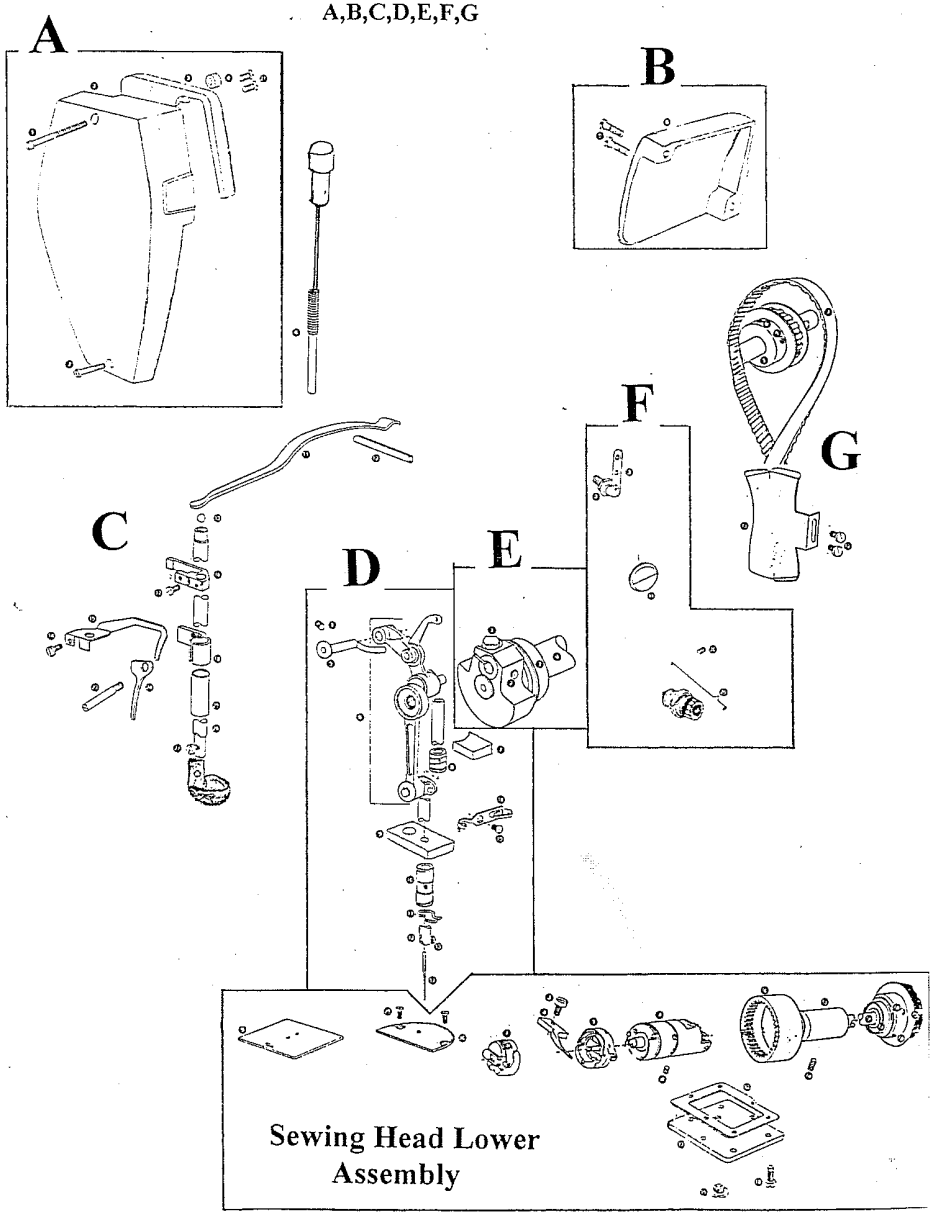

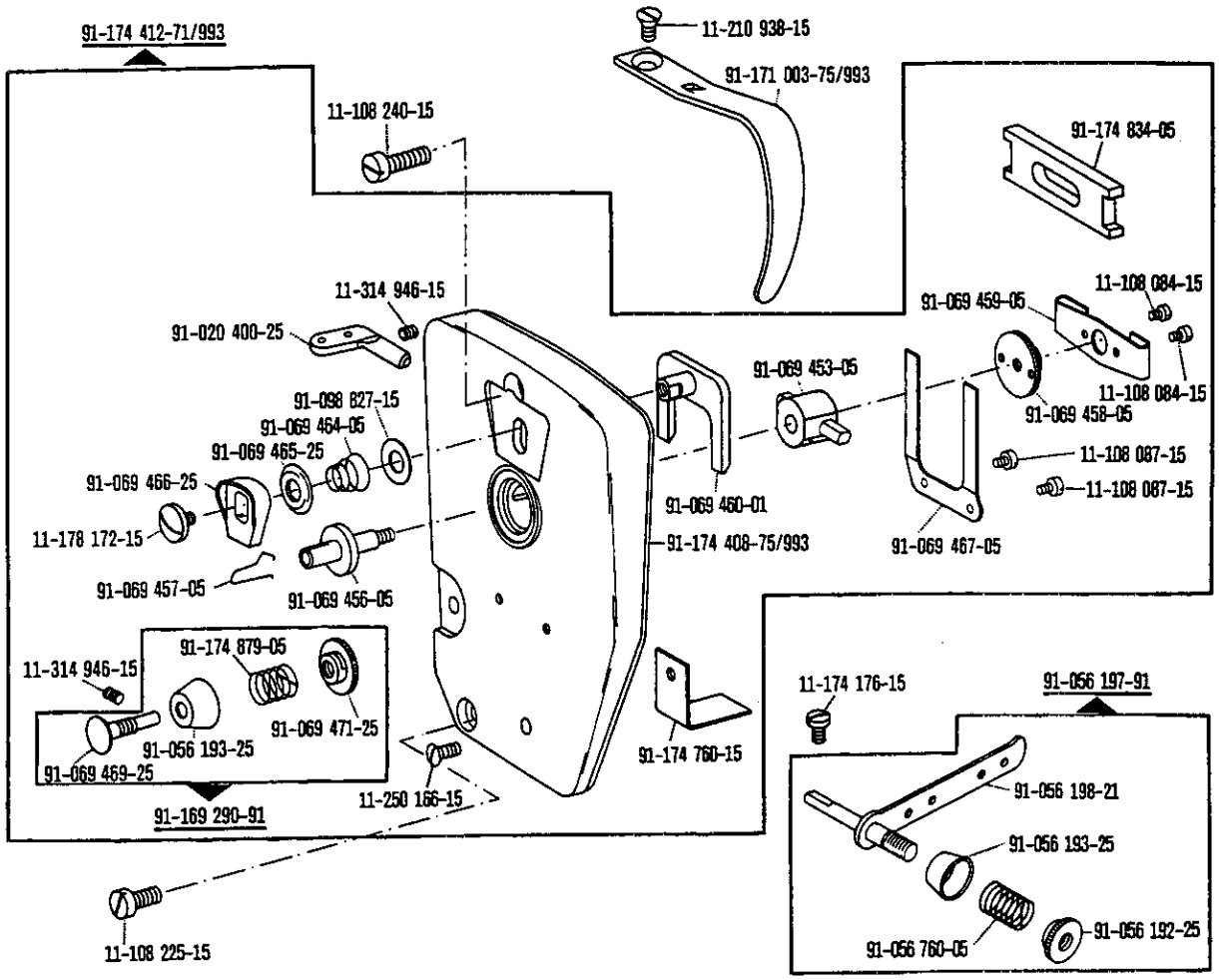
91-174 412-71/993
11-210 938-15
91-171 003-75/993
11-108 240-15
91-174 834-05
11-314 946-15
91-020 400-25
91-069 459-05
11-108 084-15
91-098 827-15
91-069 464-05
91-069 465-25
91-069 453-05
91-069 458-05
11-108 084-15
91-069 466-25
11-178 172-15
91-069 460-01
11-108 087-15
11-108 087-15
91-174 408-75/993
91-069 467-05
91-069 457-05
91-069 456-05
11-314 946-15
91-174 879-05
91-069 471-25
91-056 193-25
91-069 469-25
91-169 290-91
11-250 166-15
91-174 760-15
11-174 176-15
91-056 197-91
91-056 198-21
91-056 193-25
91-056 760-05
91-056 192-25
11-108 225-15

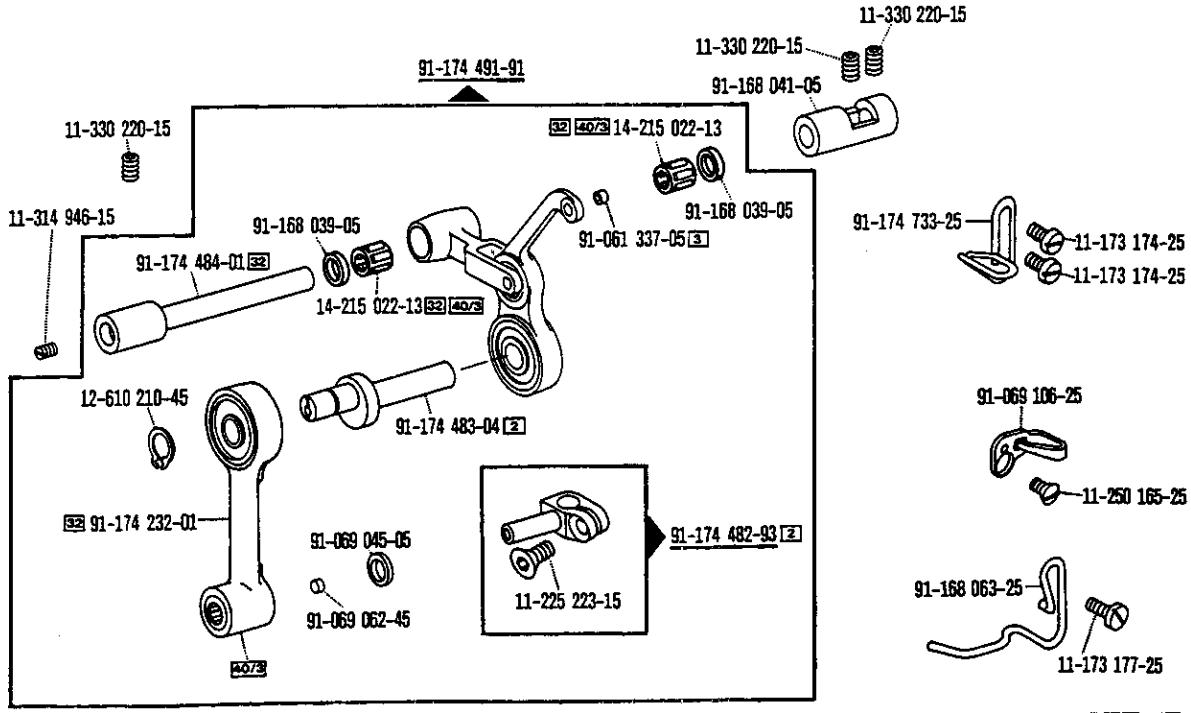
11-330 220-15
11-330 220-15
91-174 491-91
91-168 041-05
11-330 220-15
32 40/3 14-215 022-13
91-168 039-05
11-314 946-15
91-168 039-05
91-061 337-05 3
91-174 733-25
11-173 174-25
91-174 484-01 32
14-215 022-13 32 40/3
11-173 174-25
12-610 210-45
91-069 106-25
91-174 483-04 2
11-250 165-25
32 91-174 232-01
91-069 045-05
91-174 482-93 2
11-225 223-15
91-168 063-25
91-069 062-45
11-173 177-25
40/3

Kopfteile
Needle head parts
Pièces de tête
Piezas de la cabeza Pfaff 563

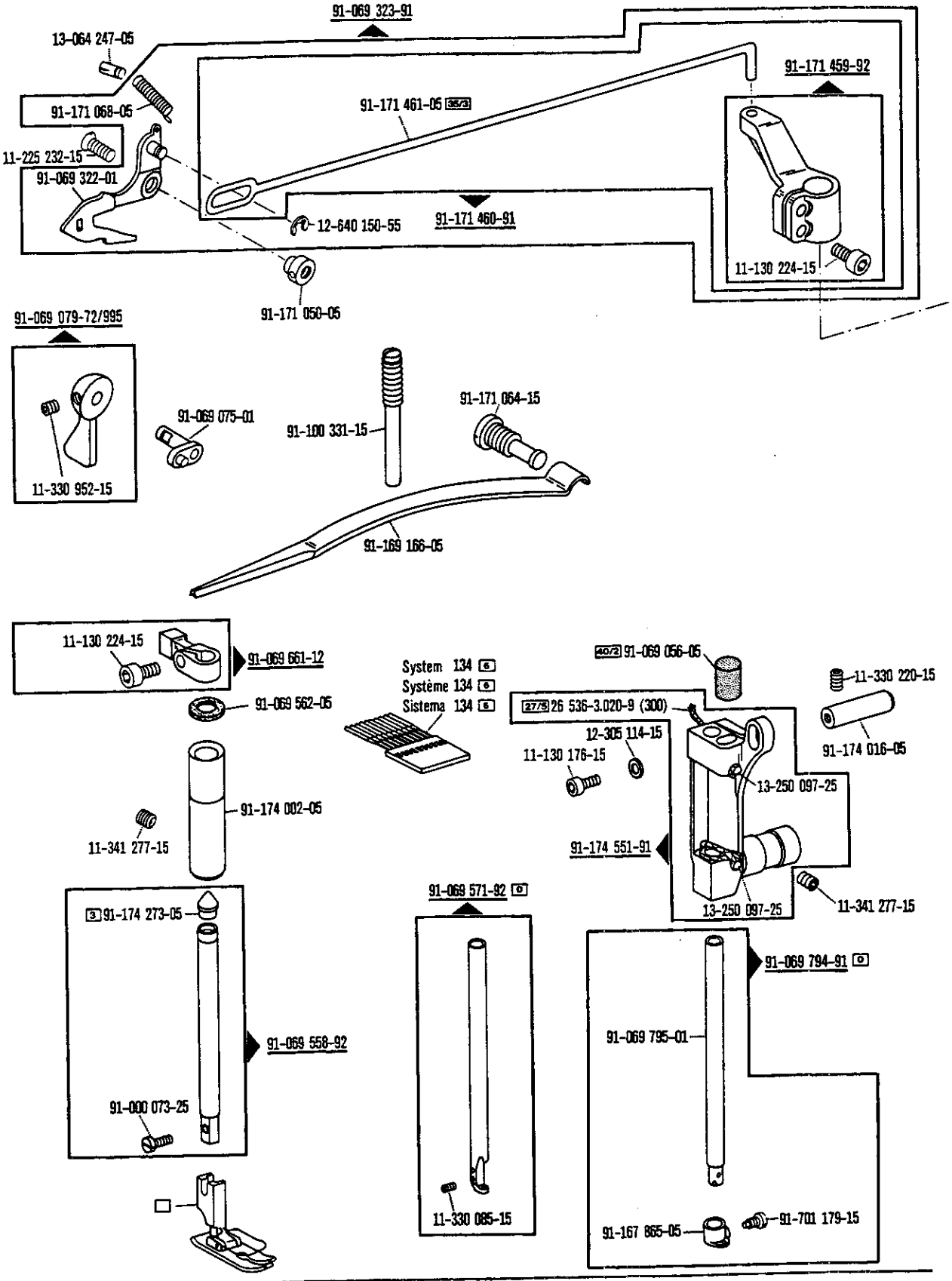

□ siehe Erläuterungen Register 0
see explanations in section 0
voir légende registre 0
ver explicaciones del registro 0

Kopfteile
Needle head parts
Pièces de tête
Piezas de la cabeza Pfaff 563

1

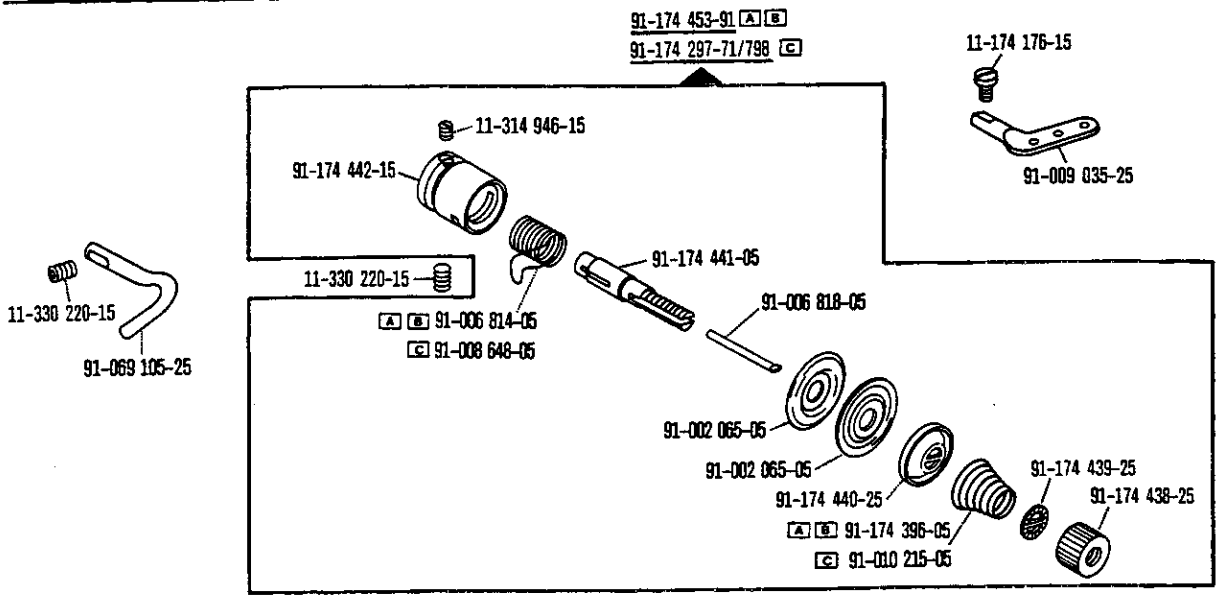

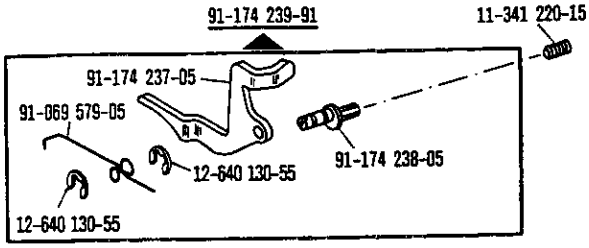

Armteile
Arm parts
Pièces de bras
Piezas del brazo Pfaff 563

2

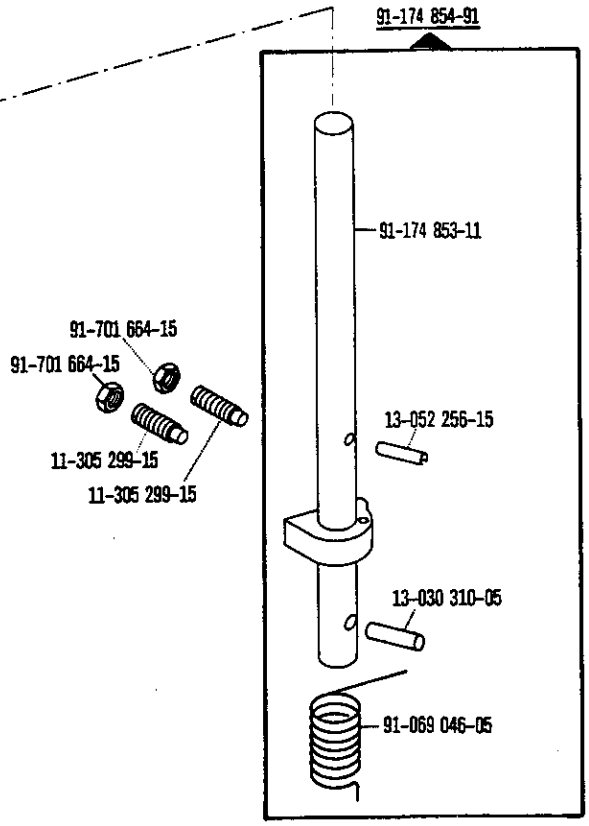

☐ siehe Erläuterungen Register 0
see explanations in section 0
voir légende registre 0
ver explicaciones del registro 0

2

Armteile
Arm parts
Pièces de bras
Piezas del brazo **Pfaff 563**

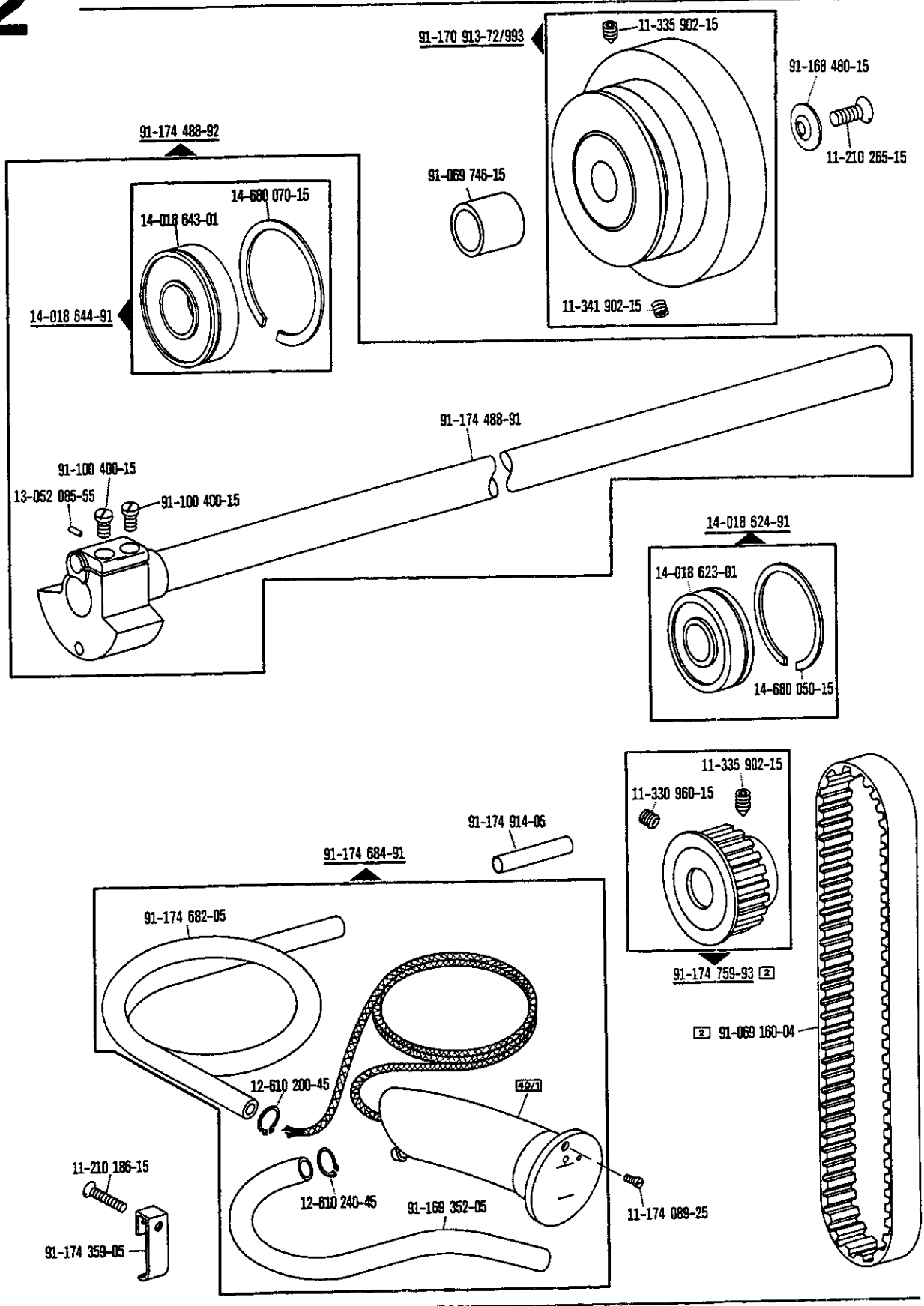

□ siehe Erläuterungen Register 0
see explanations in section 0
voir légende registre 0
ver explicaciones del registro 0

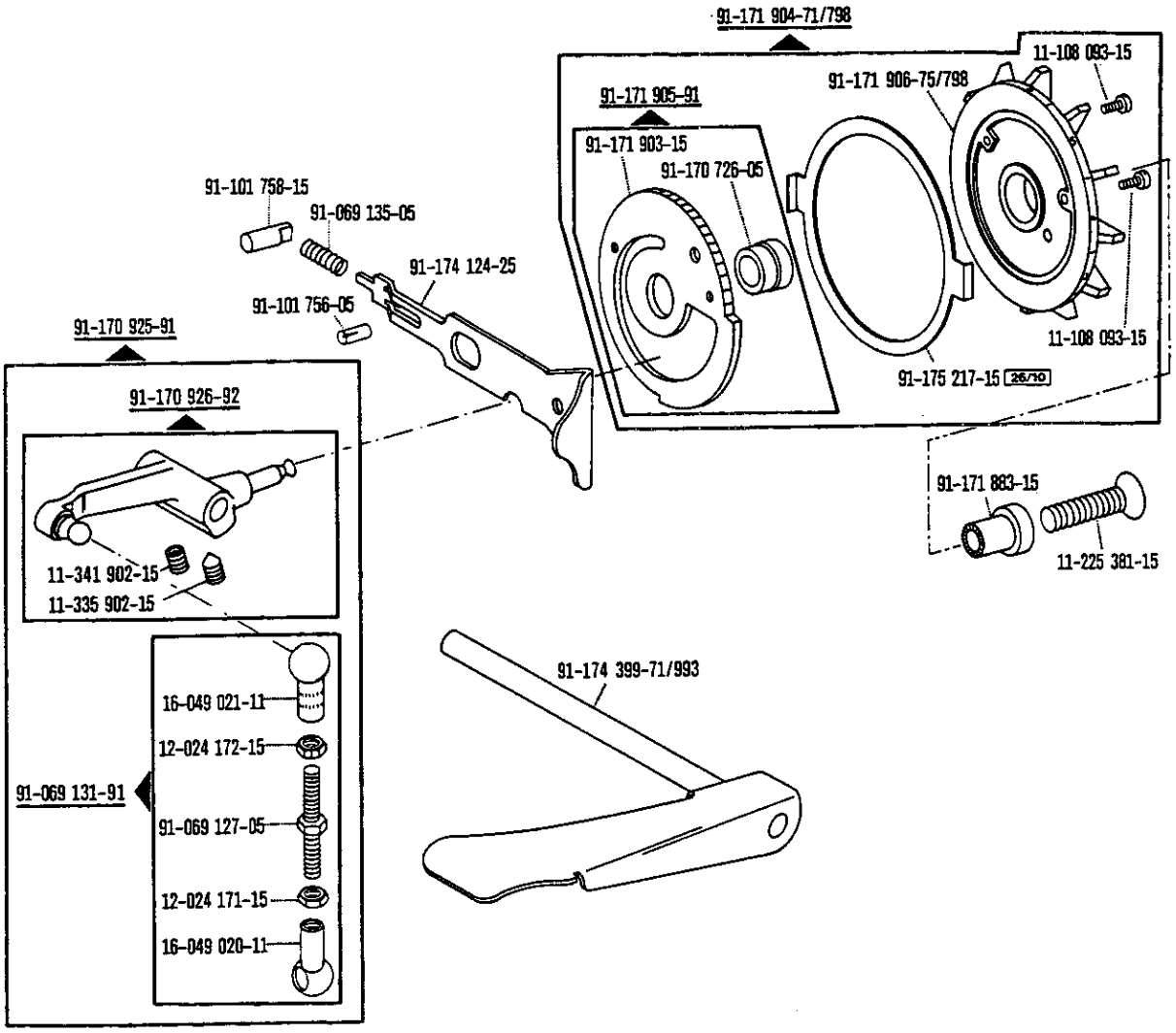

☐ siehe Erläuterungen Register 0
see explanations in section 0
voir légende registre 0
ver explicaciones del registro 0

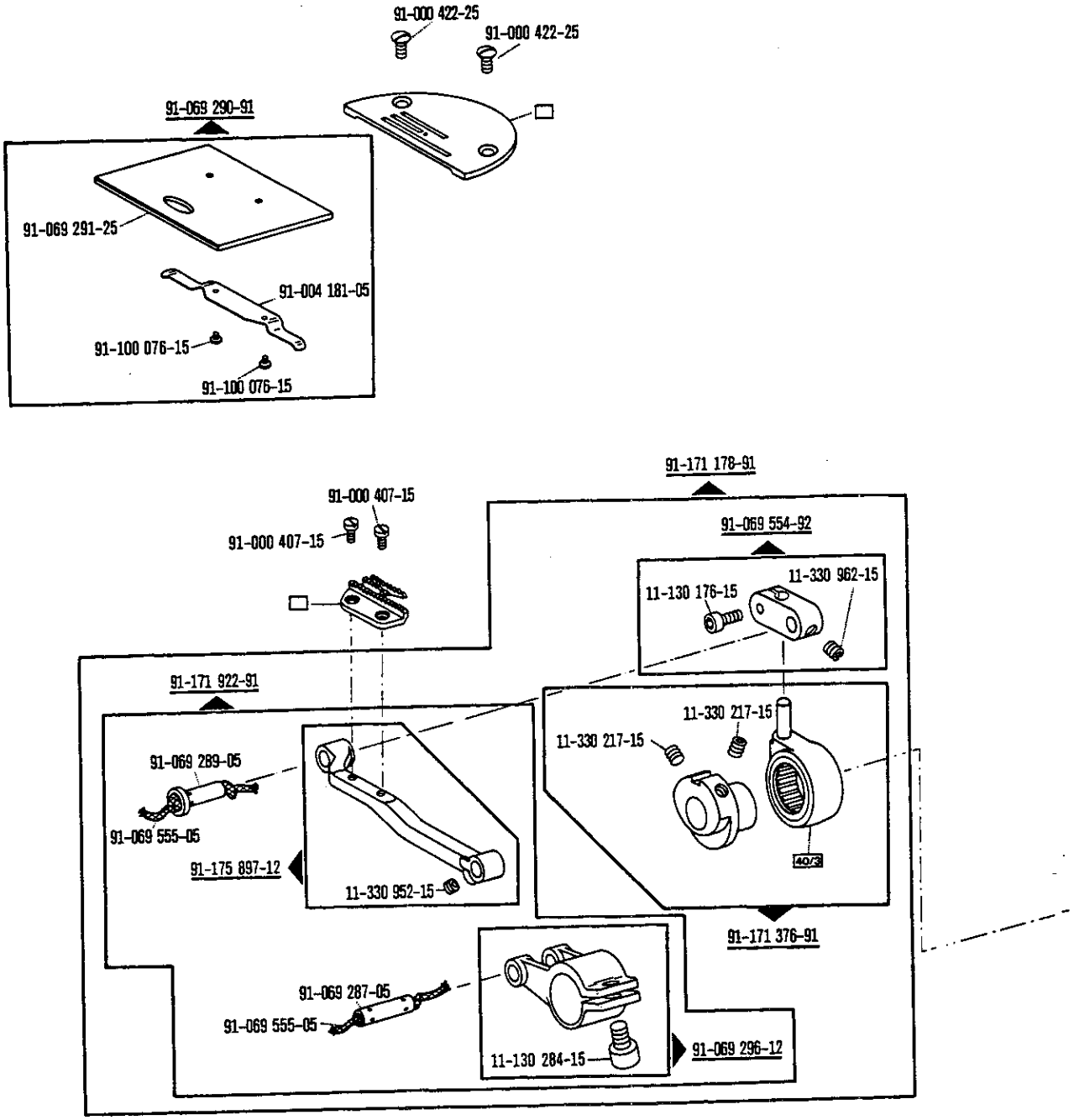

siehe Erläuterungen Register 0
see explanations in section 0
voir légende registre 0
ver explicaciones del registro 0

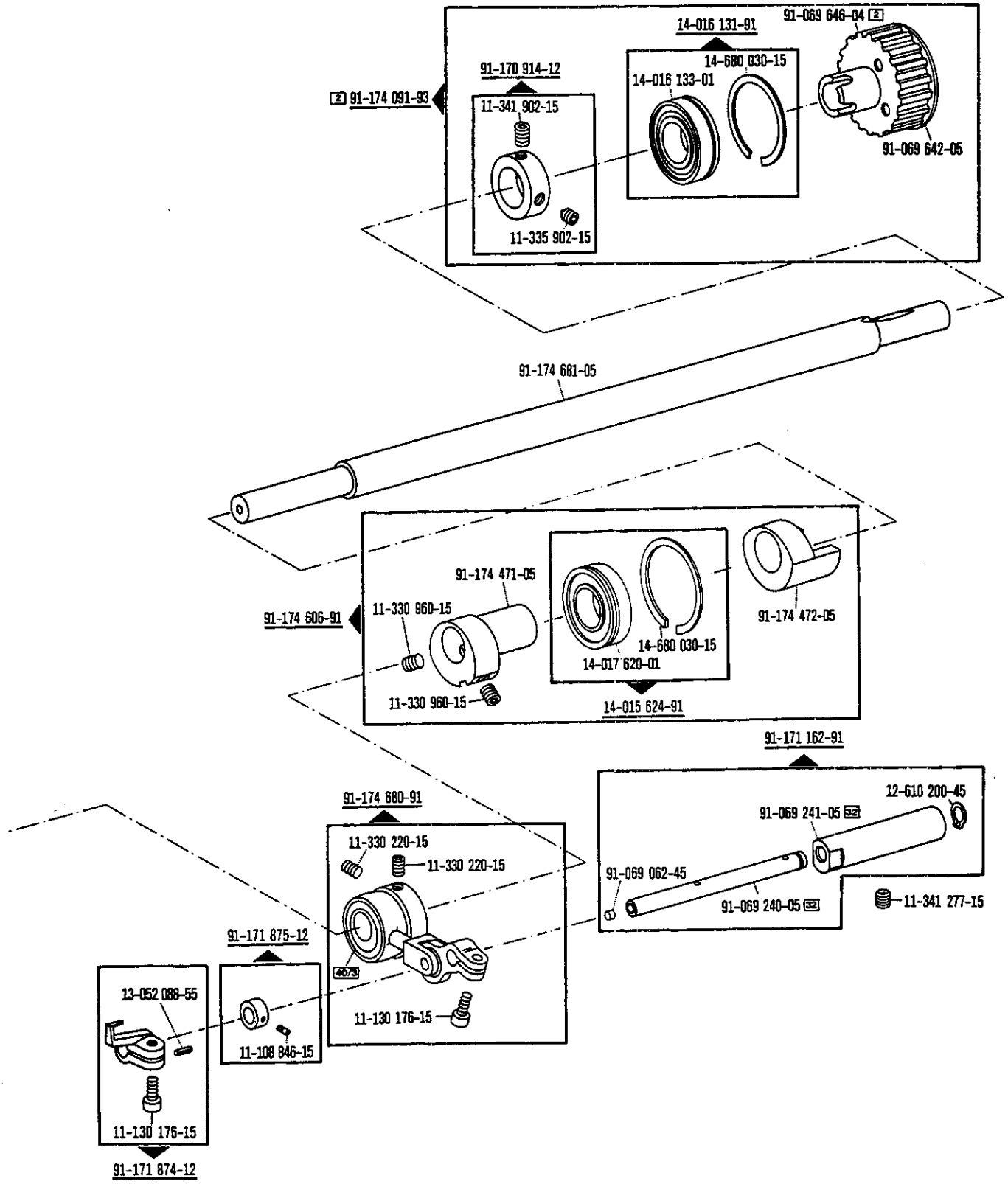

☐ siehe Erläuterungen Register 0
see explanations in section 0
voir légende registre 0
ver explicaciones del registro 0

3

Grundplattenteile
Bedplate parts
Pièces du plateau fondamental
Piezas de la placa-base **Pfaff 563**

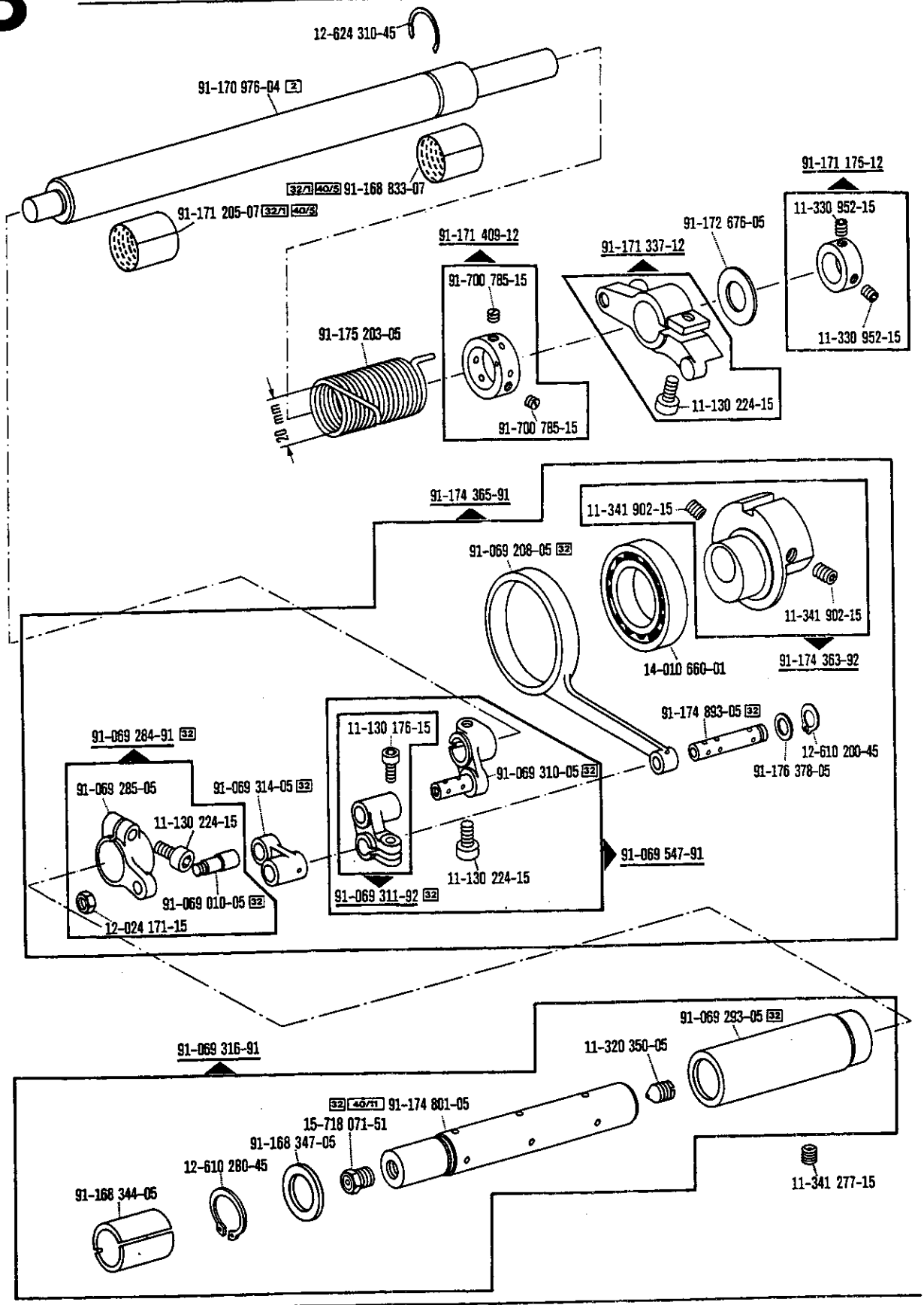

□ siehe Erläuterungen Register 0
see explanations in section 0
voir légende registre 0
ver explicaciones del registro 0

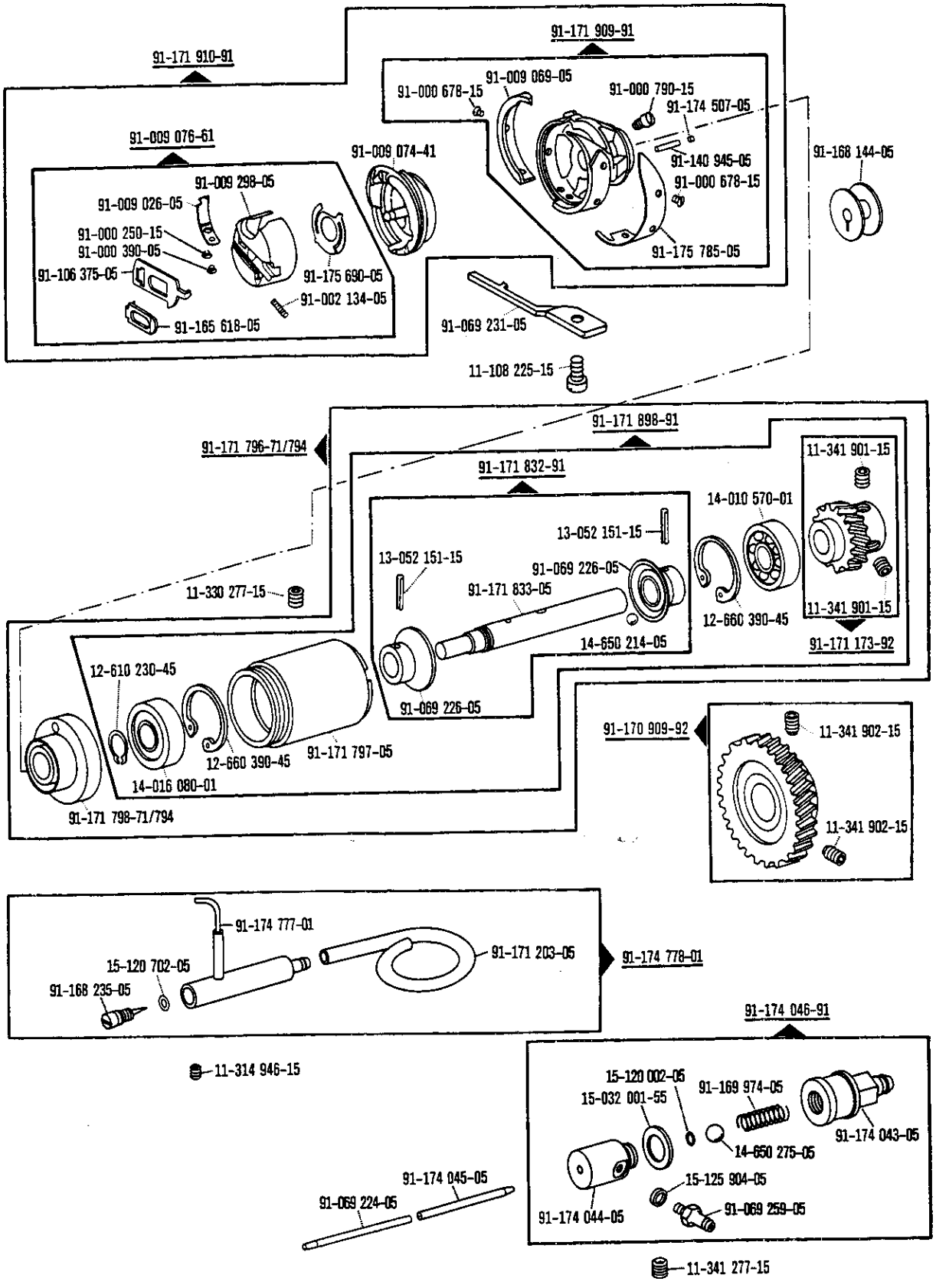

siehe Erläuterungen Register 0
see explanations in section 0
voir légende registre 0
ver explicaciones del registro 0

4

Gehäuseteile
Housing sections
Parties du corps
Piezas del cárter **Pfaff 561; 563; 563H**

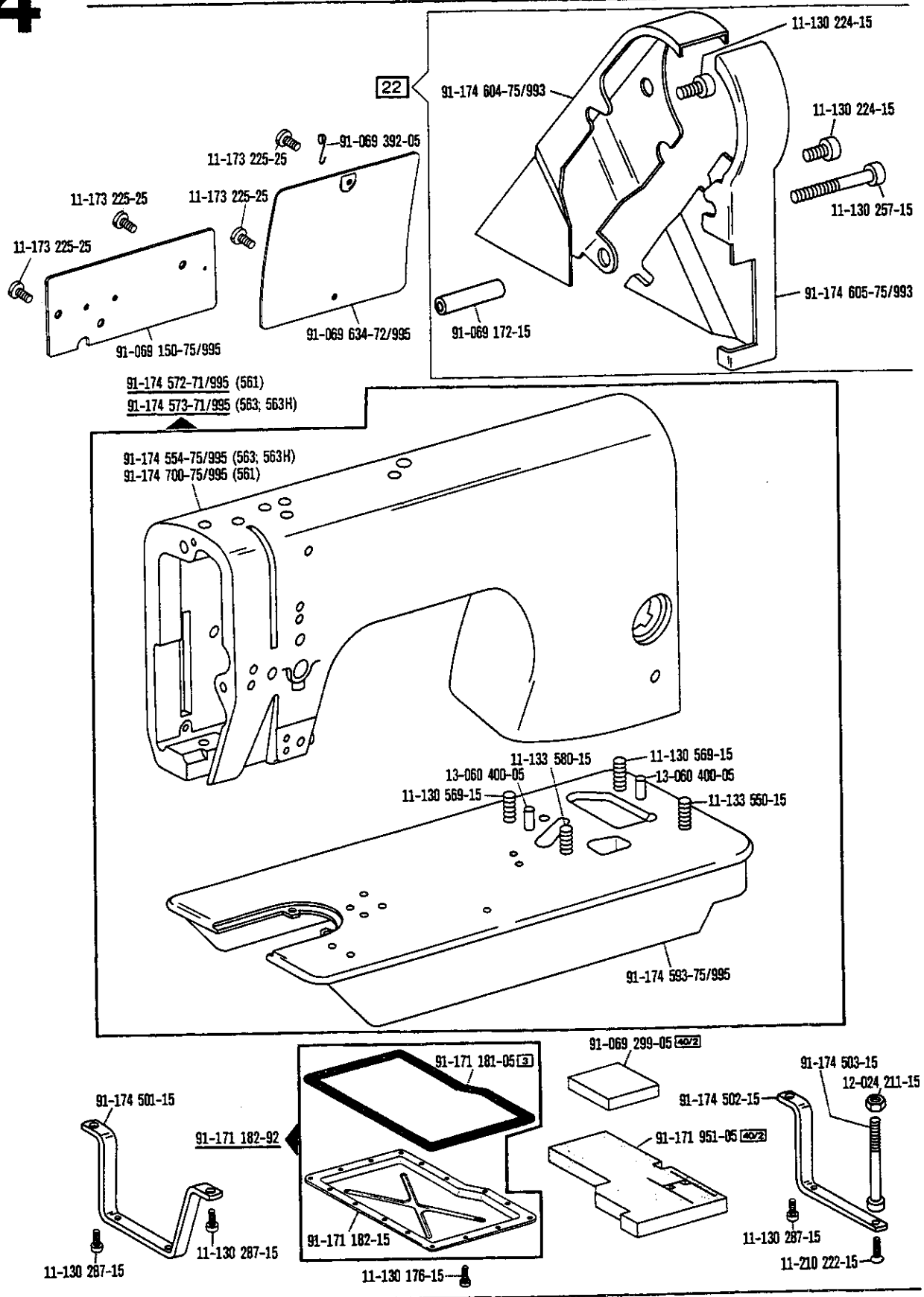

☐ siehe Erläuterungen Register 0
see explanations in section 0
voir légende registre 0
ver explicaciones del registro 0

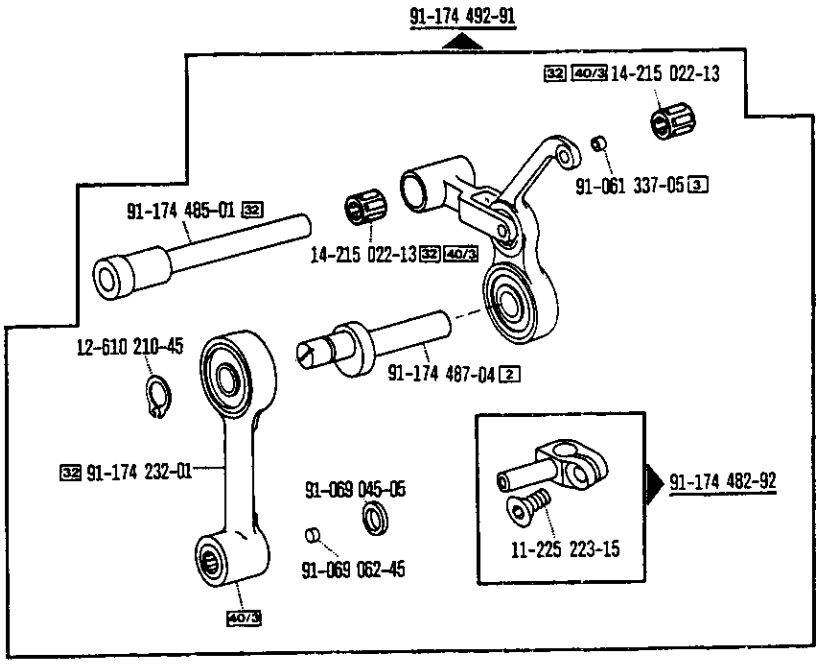
91-174 492-91
32 40/3 14-215 022-13
91-061 337-05 3
91-174 485-01 32
14-215 022-13 32 40/3
12-610 210-45
91-174 487-04 2
32 91-174 232-01
91-069 045-05
91-069 062-45
40/3
91-174 482-92
11-225 223-15

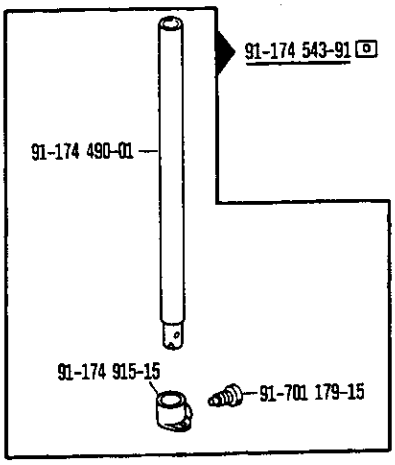
91-174 543-91 0
91-174 490-01
91-174 915-15
91-701 179-15

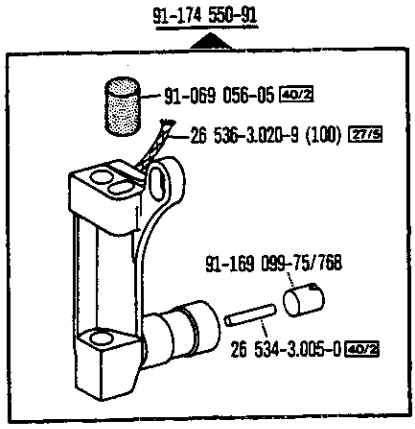
91-174 550-91
91-069 056-05 40/2
26 536-3.020-9 (100) 27/5
91-169 099-75/768
26 534-3.005-0 40/2

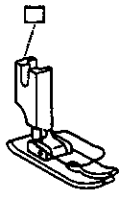

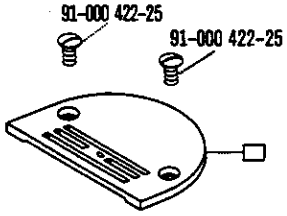
91-000 422-25
91-000 422-25

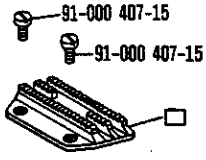
91-000 407-15
91-000 407-15

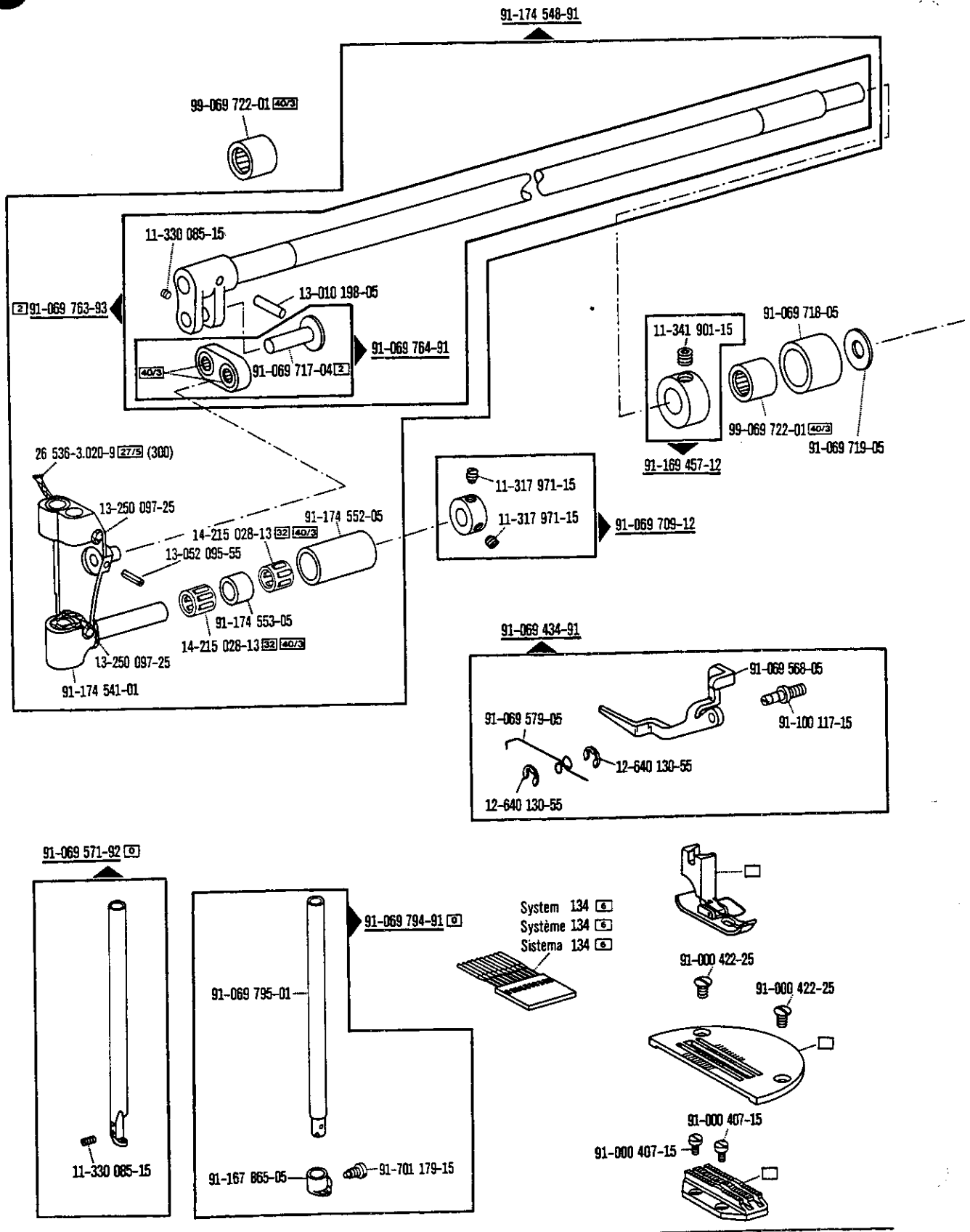

□ siehe Erläuterungen Register 0
see explanations in section 0
voir légende registre 0
ver explicaciones del registro 0

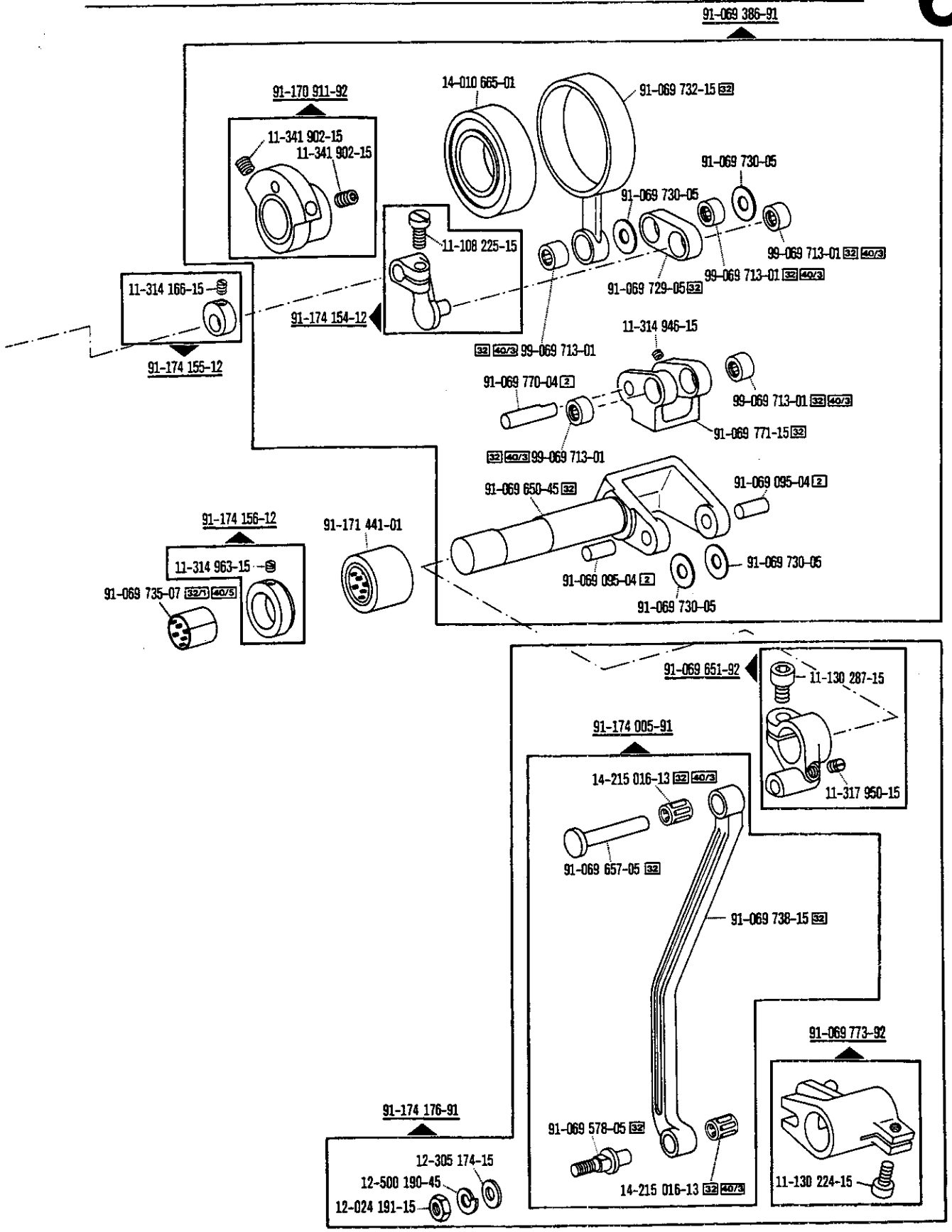
91-069 386-91
91-170 911-92
11-341 902-15
11-341 902-15
14-010 665-01
91-069 732-15 32
91-069 730-05
91-069 730-05
99-069 713-01 32 40/3
99-069 713-01 32 40/3
11-108 225-15
91-069 729-05 32
11-314 166-15
91-174 154-12
91-174 155-12
32 40/3 99-069 713-01
11-314 946-15
91-069 770-04 2
99-069 713-01 32 40/3
91-069 771-15 32
32 40/3 99-069 713-01
91-069 650-45 32
91-069 095-04 2
91-174 156-12
91-171 441-01
11-314 963-15
91-069 735-07 32/1 40/5
91-069 730-05
91-069 095-04 2
91-069 730-05
91-069 651-92
11-130 287-15
91-174 005-91
14-215 016-13 32 40/3
11-317 950-15
91-069 657-05 32
91-069 738-15 32
91-069 773-92
91-174 176-91
91-069 578-05 32
12-305 174-15
12-500 190-45
12-024 191-15
14-215 016-13 32 40/3
11-130 224-15

7

Kanten-Beschneideinrichtung
Edge trimmer
Couteau
Recortador

-731/01 zur · pour for · para **Pfaff 561; 563**

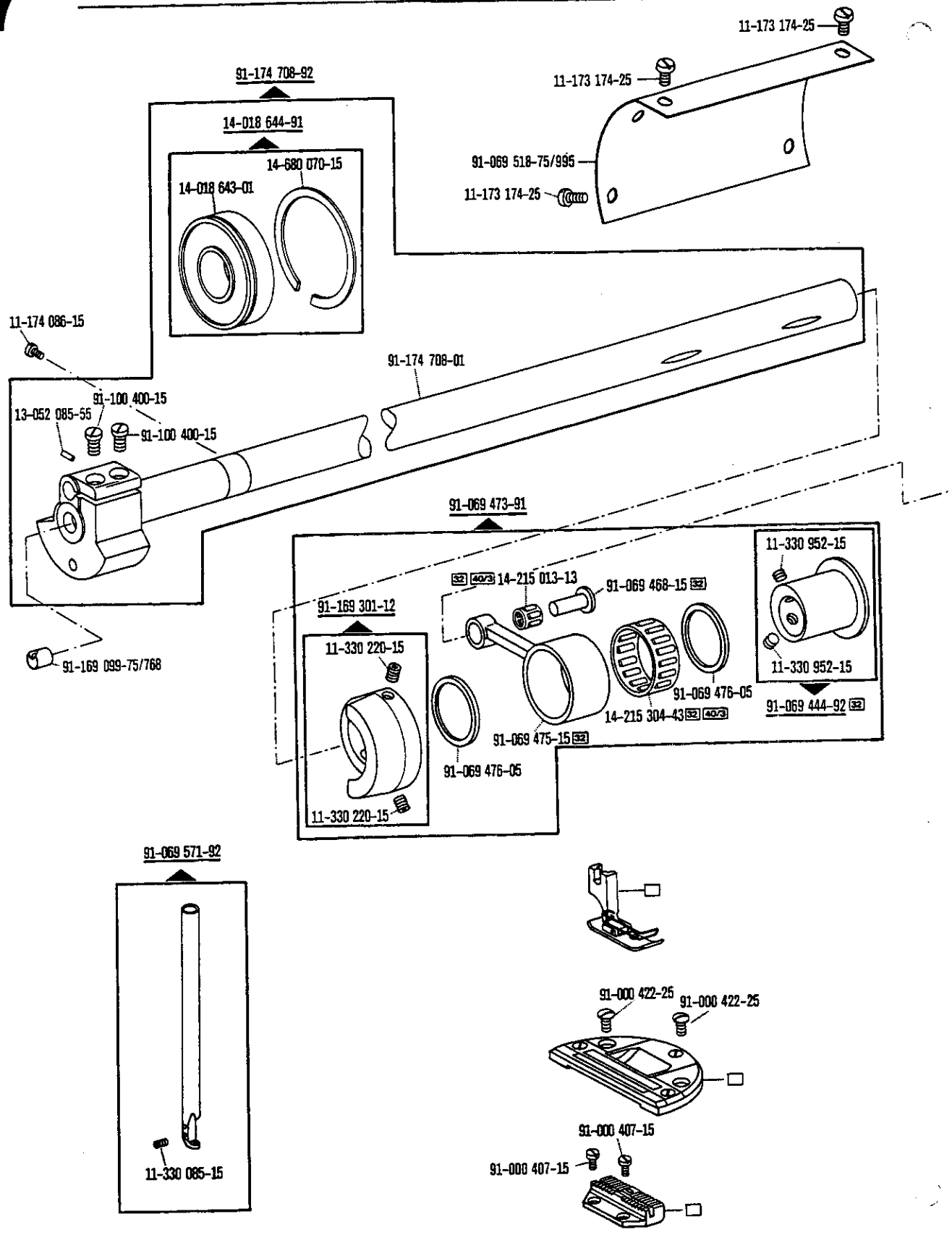

□ siehe Erläuterungen Register 0
see explanations in section 0
voir légende registre 0
ver explicaciones del registro 0

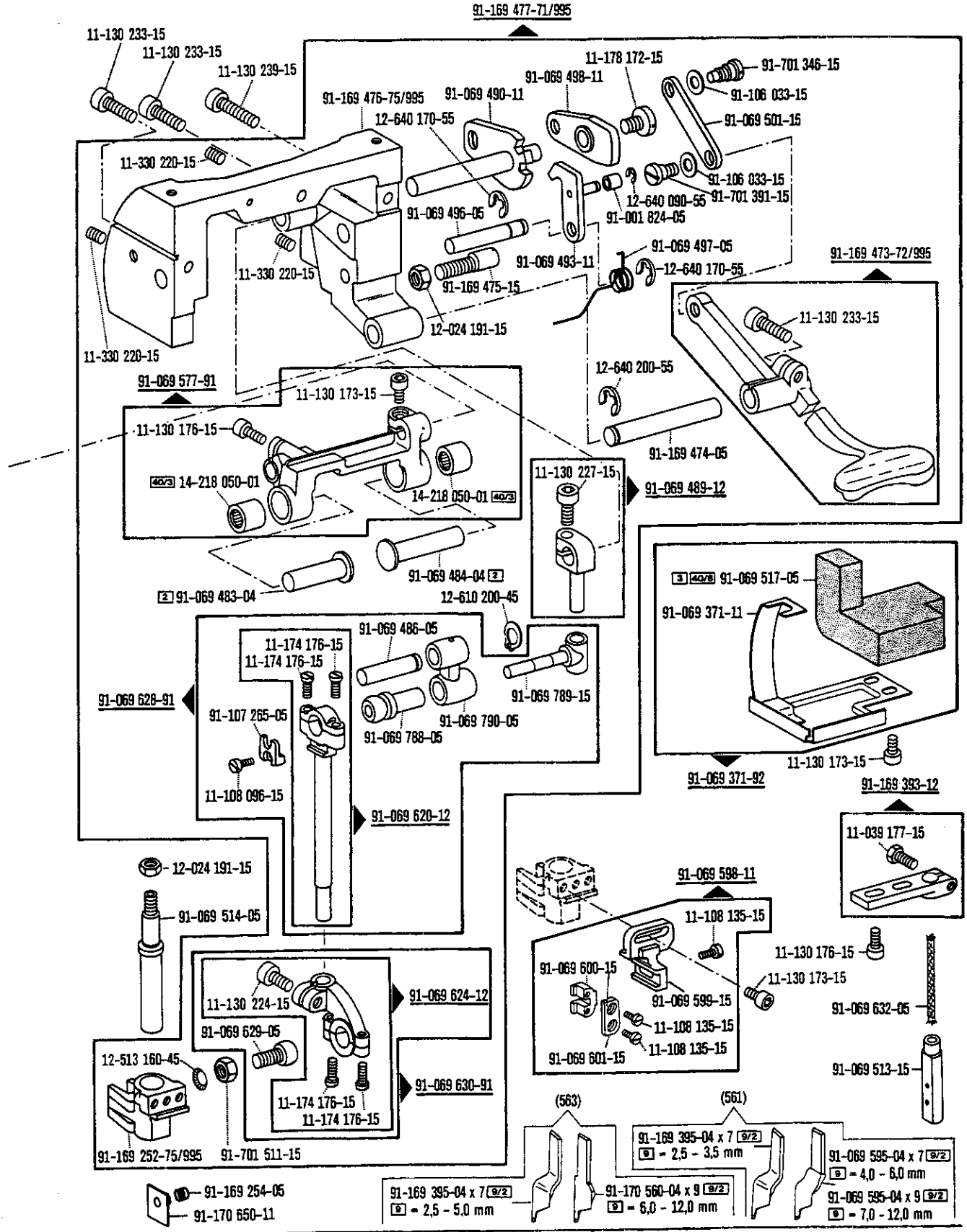

☐ siehe Erläuterungen Register 0
see explanations in section 0
voir légende registre 0
ver explicaciones del registro 0

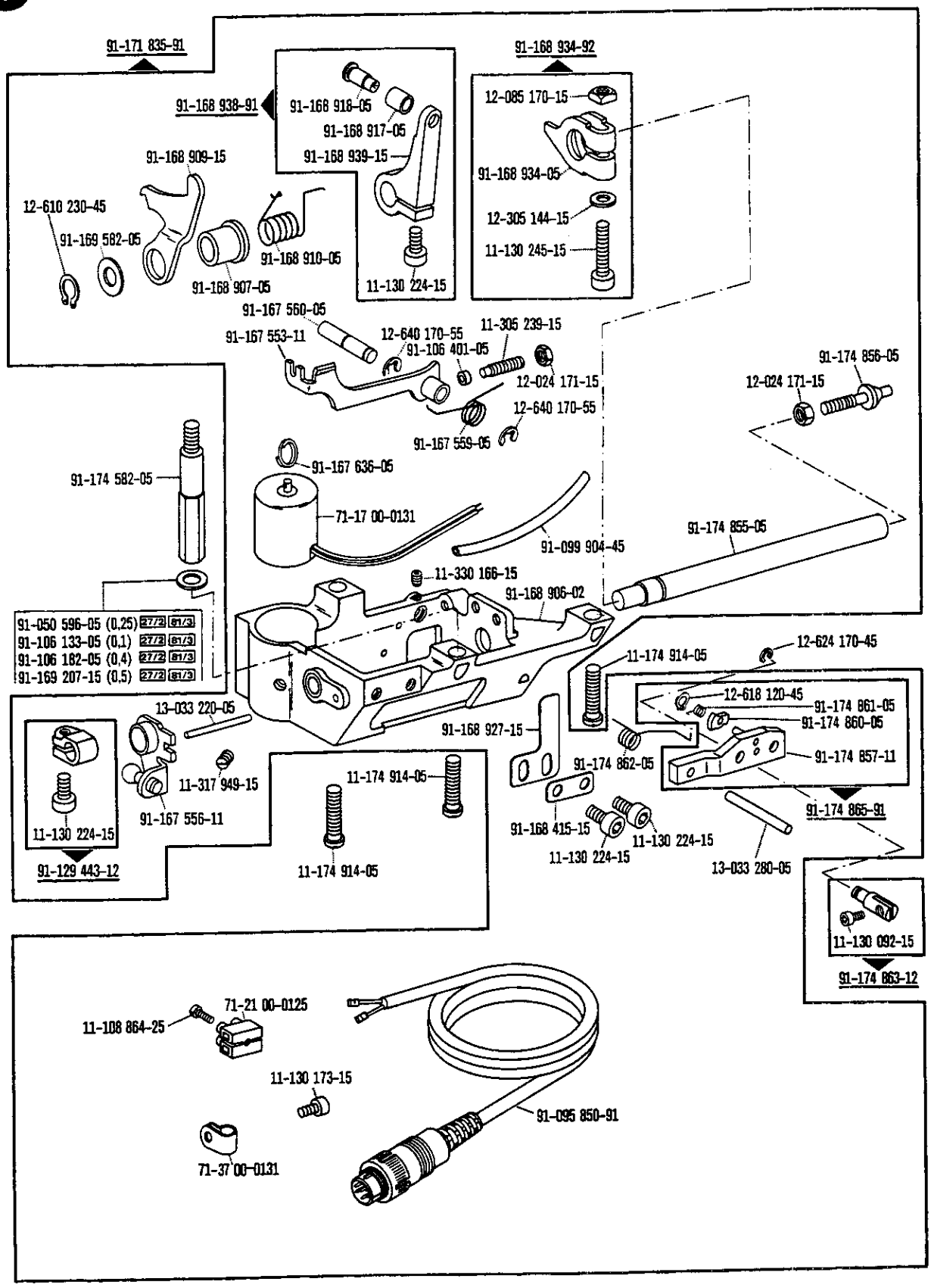

☐ siehe Erläuterungen Register 0
see explanations in section 0
voir légende registre 0
ver explicaciones del registro 0

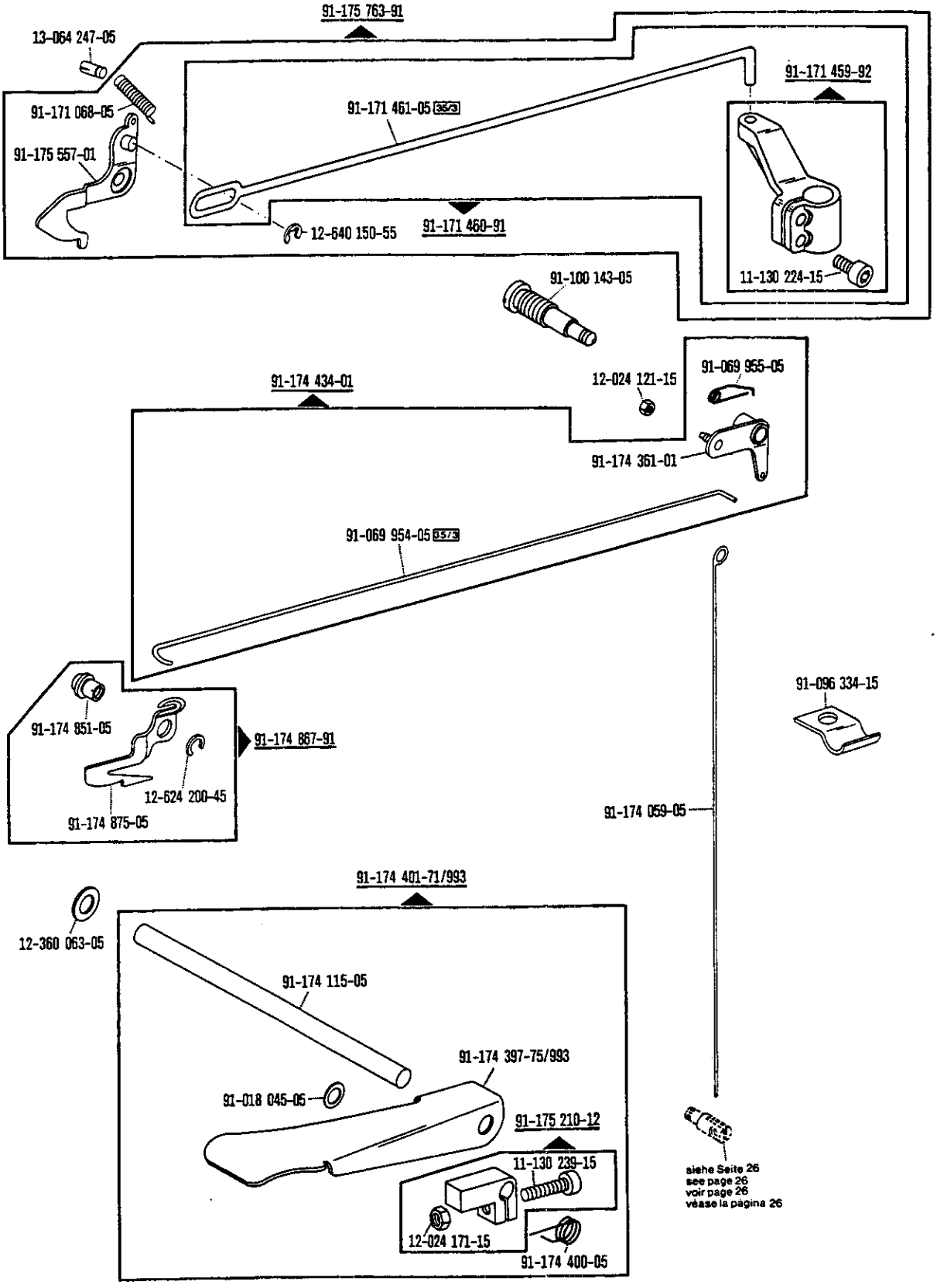

☐ siehe Erläuterungen Register 0
see explanations in section 0
voir légende registre 0
ver explicaciones del registro 0

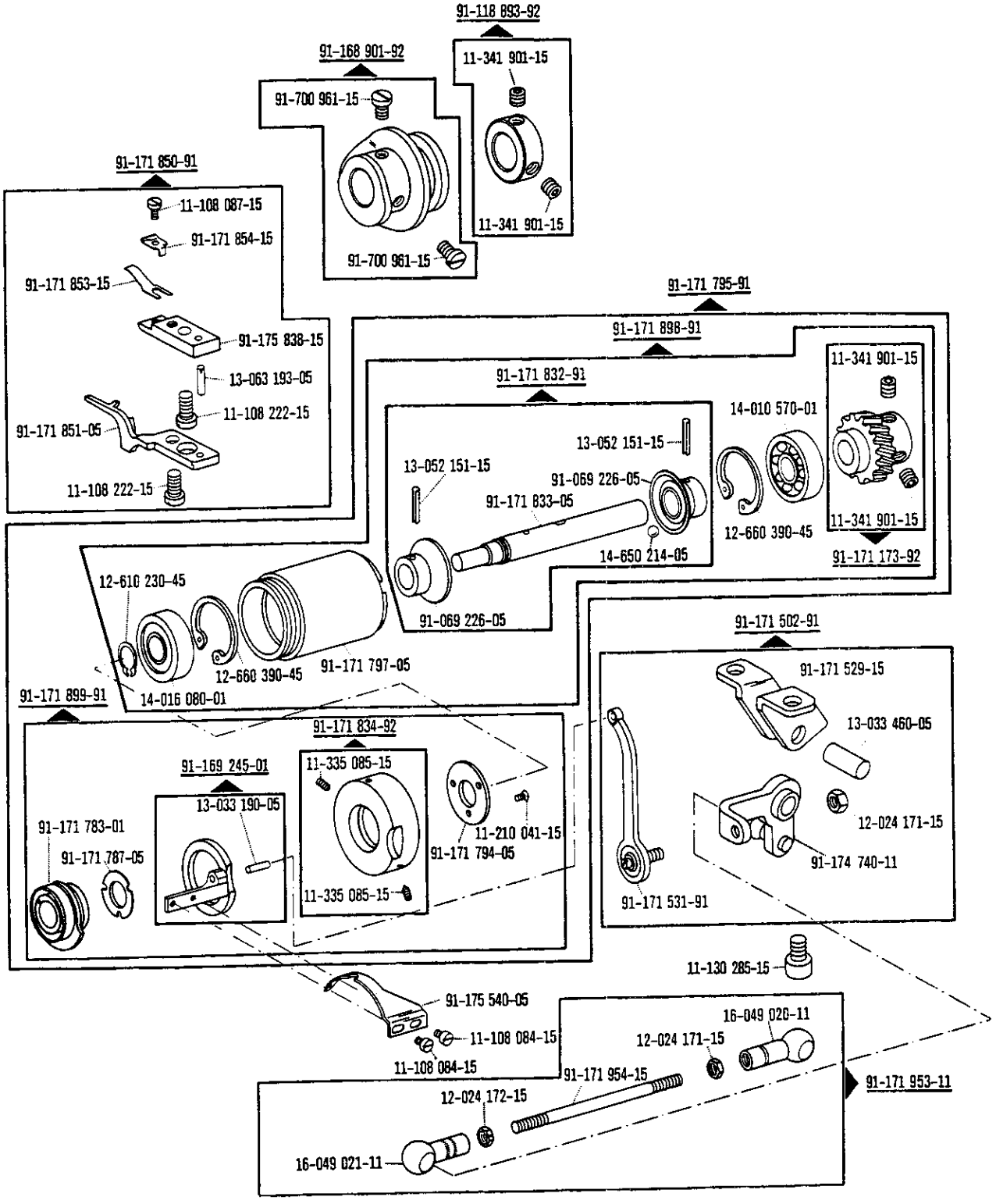

☐ siehe Erläuterungen Register 0
see explanations in section 0
voir legende registre 0
ver explicaciones del registro 0

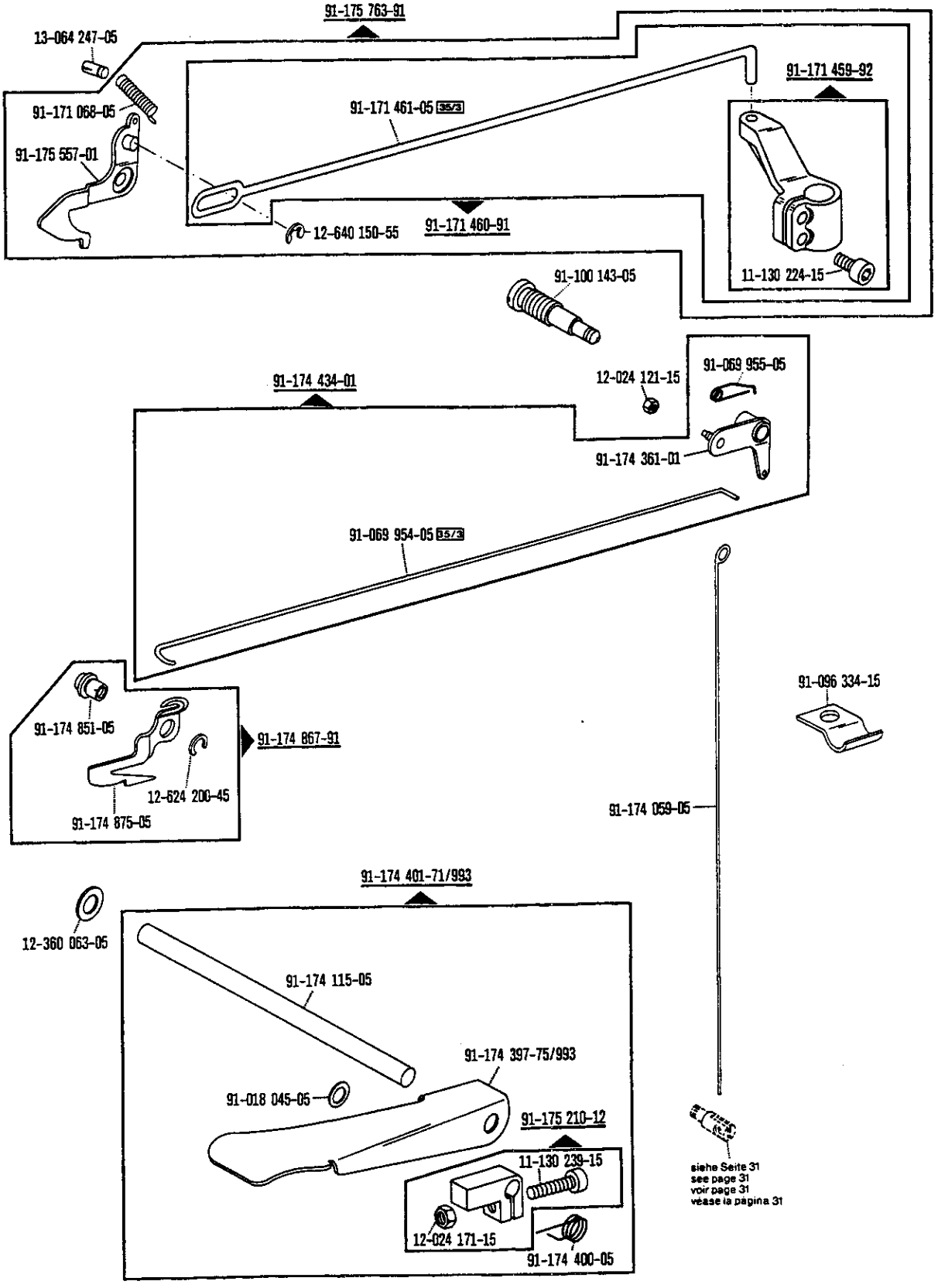

☐ siehe Erläuterungen Register 0
see explanations in section 0
voir légende registre 0
ver explicaciones del registro 0

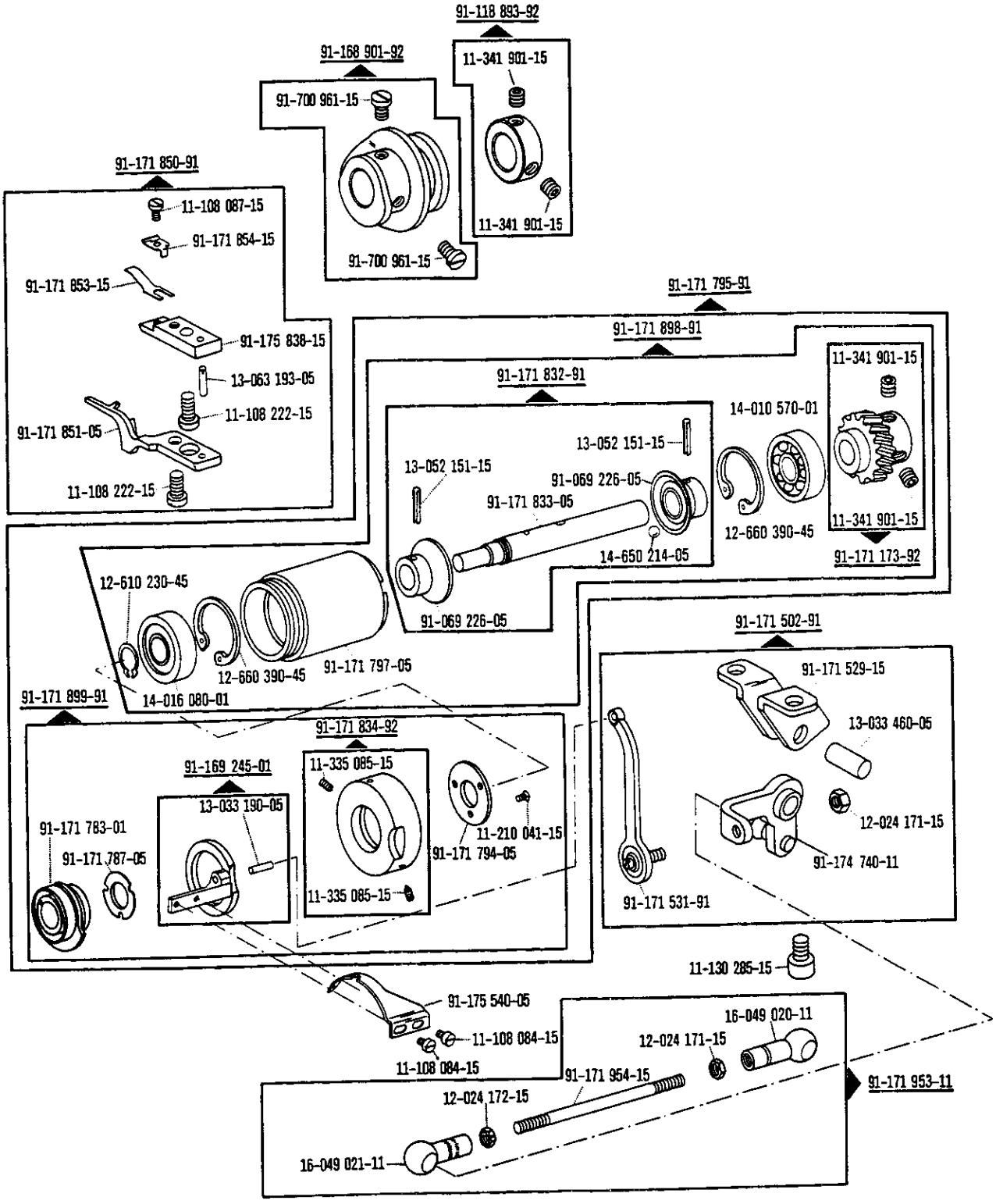

siehe Erläuterungen Register 0
see explanations in section 0
voir légende registre 0
ver explicaciones del registro 0

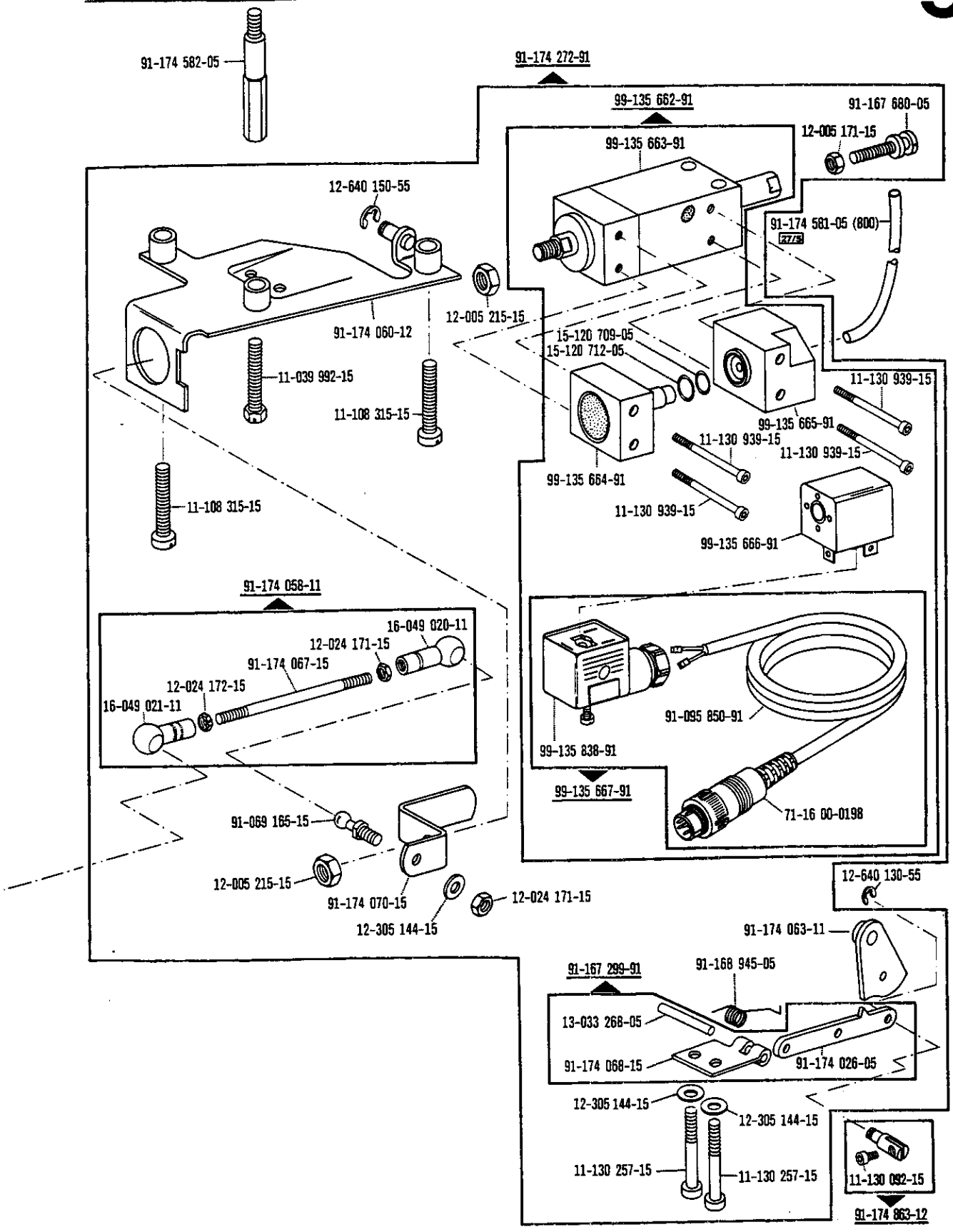
91-174 582-05
91-174 272-91
99-135 662-91
91-167 680-05
12-005 171-15
99-135 663-91
12-640 150-55
91-174 581-05 (800)
27/9
12-005 215-15
91-174 060-12
15-120 709-05
15-120 712-05
11-039 992-15
11-108 315-15
11-130 939-15
99-135 665-91
11-130 939-15
11-130 939-15
99-135 664-91
11-130 939-15
11-108 315-15
99-135 666-91
91-174 058-11
16-049 020-11
12-024 171-15
91-174 067-15
12-024 172-15
16-049 021-11
91-095 850-91
99-135 838-91
99-135 667-91
71-16 00-0198
91-069 165-15
12-005 215-15
91-174 070-15
12-024 171-15
12-305 144-15
12-640 130-55
91-174 063-11
91-167 299-91
91-168 945-05
13-033 268-05
91-174 068-15
91-174 026-05
12-305 144-15
12-305 144-15
11-130 257-15
11-130 257-15
11-130 092-15
91-174 863-12

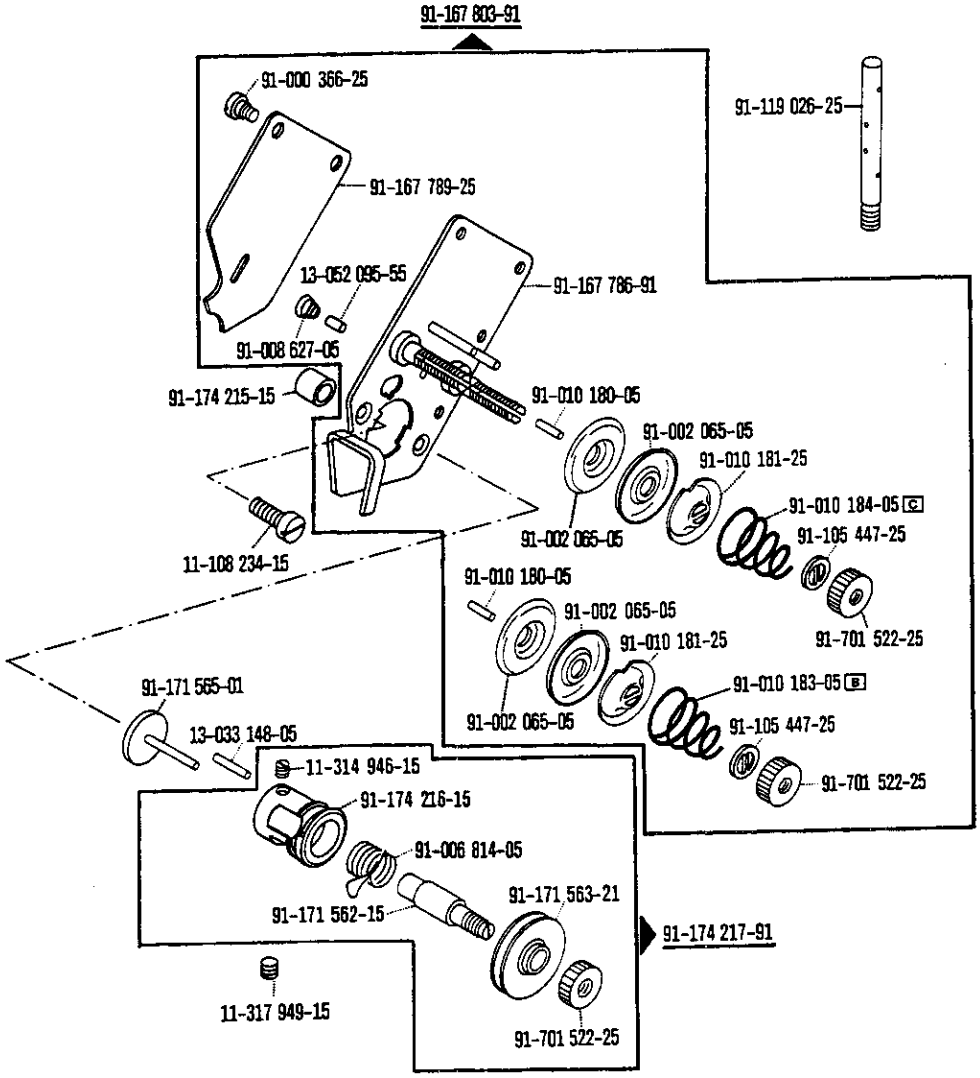

☐ siehe Erläuterungen Register 0
see explanations in section 0
voir légende registre 0
ver explicaciones del registro 0

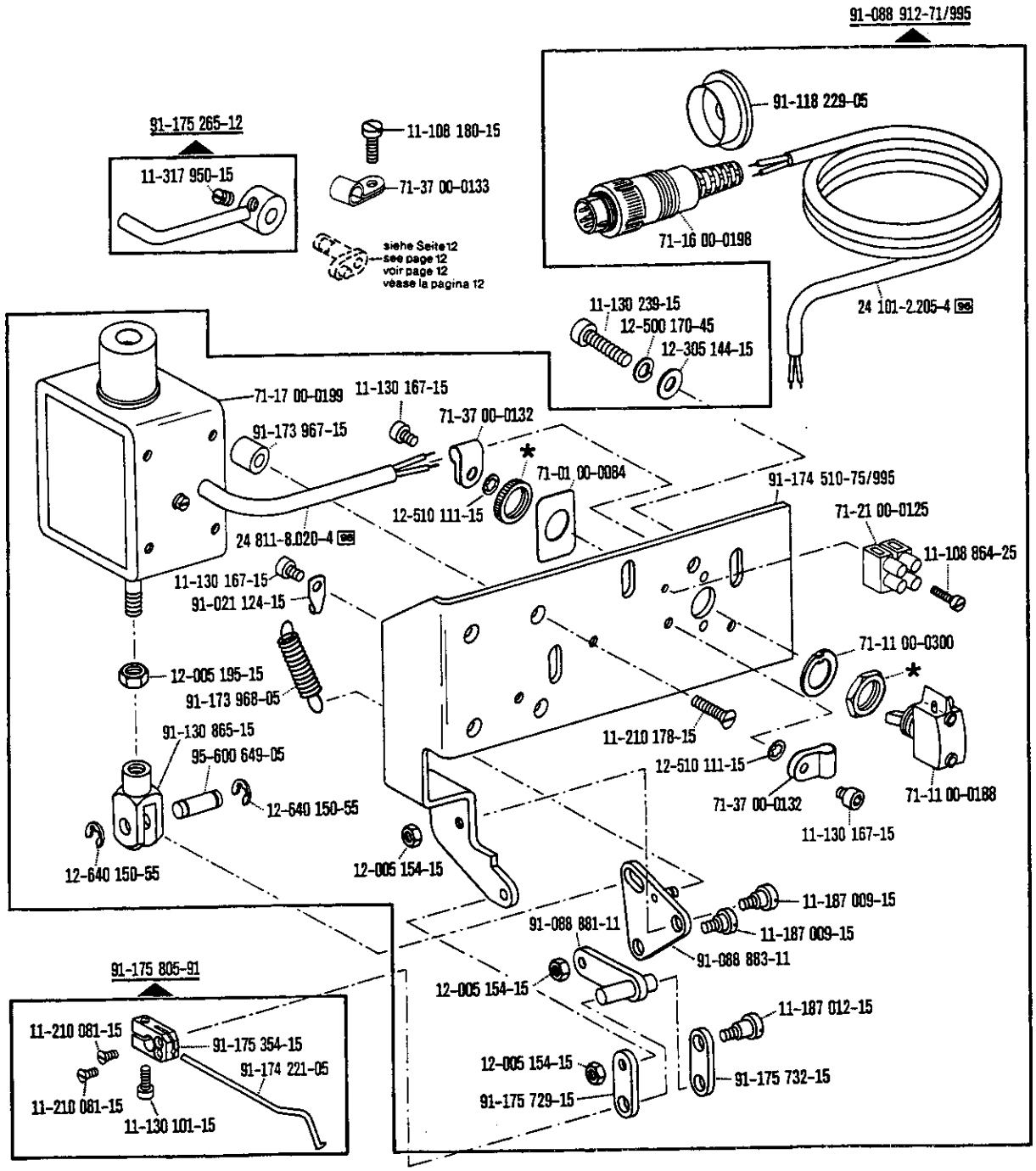

☐ siehe Erläuterungen Register 0
see explanations in section 0
voir légende registre 0
ver explicaciones del registro 0

* In Nr. 71-11 00-0188 enthalten
In No. 71-11 00-0188 included
Est inclu en n° 71-11 00-0188
Está incluido en el Nº 71-11 00-0188

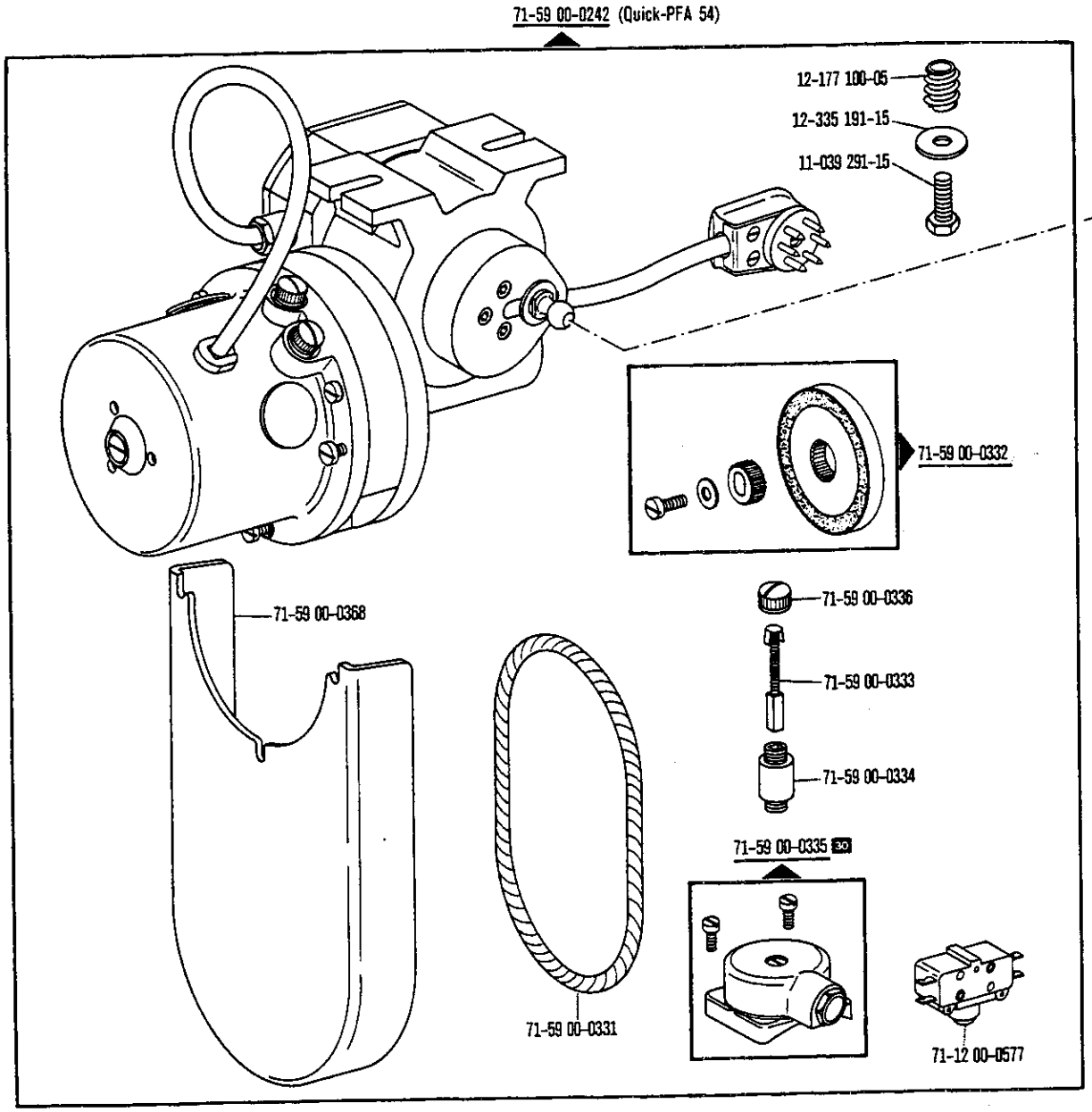

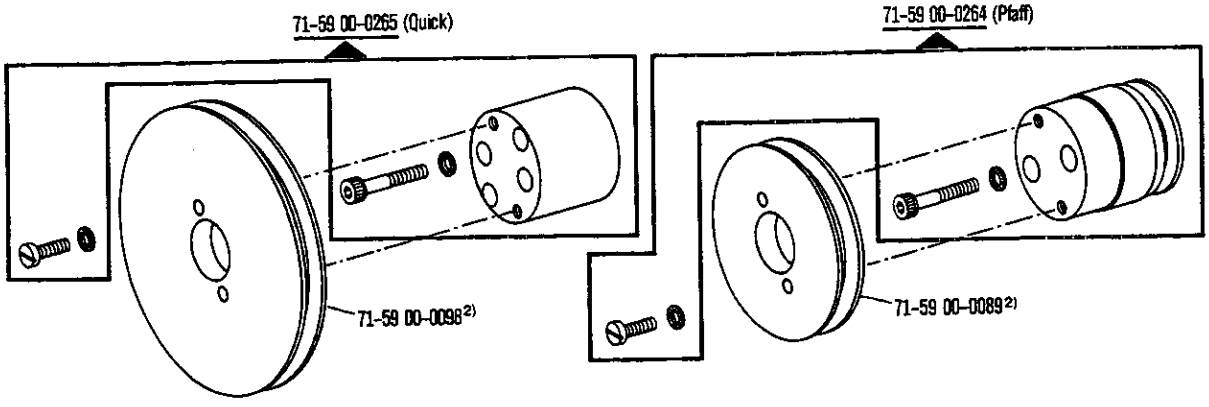

2) siehe Schnurscheiben-Tabelle Seite 35
see Table of pulleys on page 35
voir page 35 tableau des poulies à gorge
véase tabla de poleas acanaladas, página 35

☐ siehe Erläuterungen Register 0
see explanations in section 0
voir légende registre 0
ver explicaciones del registro 0

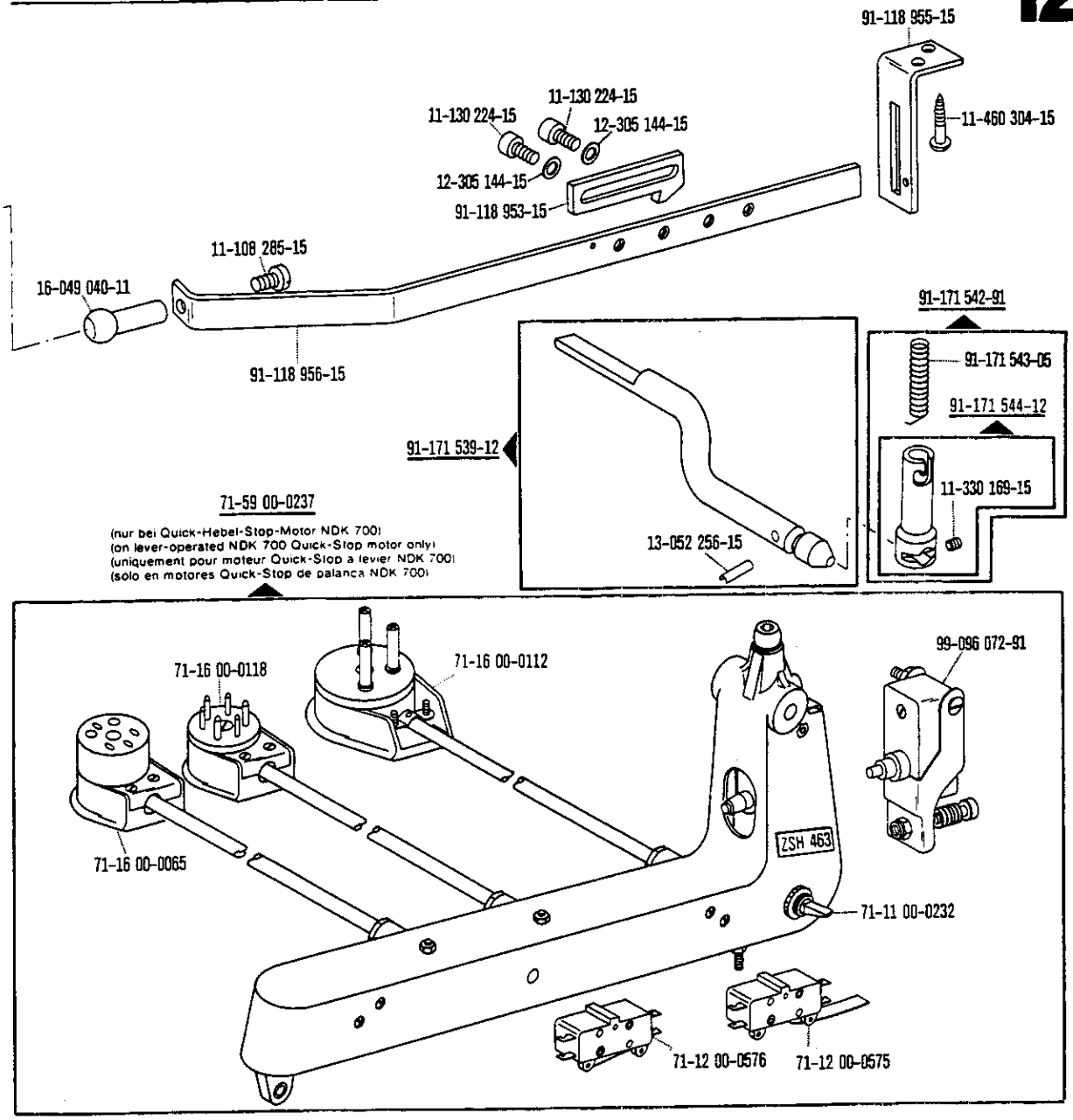

Schnurscheiben-Tabelle · Table of Pulleys

Tableau des poulies à gorge · Tabla de poleas acanaladas

Teilenummer Part number Numéros des pièces Nº de las piezas	Motordrehzahl U/min. Motor speed (r.p.m.) Régime moteur trs/mn Regimen del motor en r.p.m.	Frequenz Frequency Fréquence Frecuencia	Schnurscheiben-Durchmesser[1] in mm Pulley dia.[1] (mm) Diamètre effectif de la poulie en mm Diámetro efectivo de la polea en mm
71-59 00-0098	1400	50 Hz (c/s)	86
	1700	60 Hz (c/s)	86
71-59 00-0089	2800	50 Hz (c/s)	56
	3400	60 Hz (c/s)	56

☐ siehe Erläuterungen Register 0
see explanations in section 0
voir legende registre 0
ver explicaciones del registro 0

[1] Wirksamer Durchmesser
Effective diameter
Diamètre effectif
Diámetro efectivo

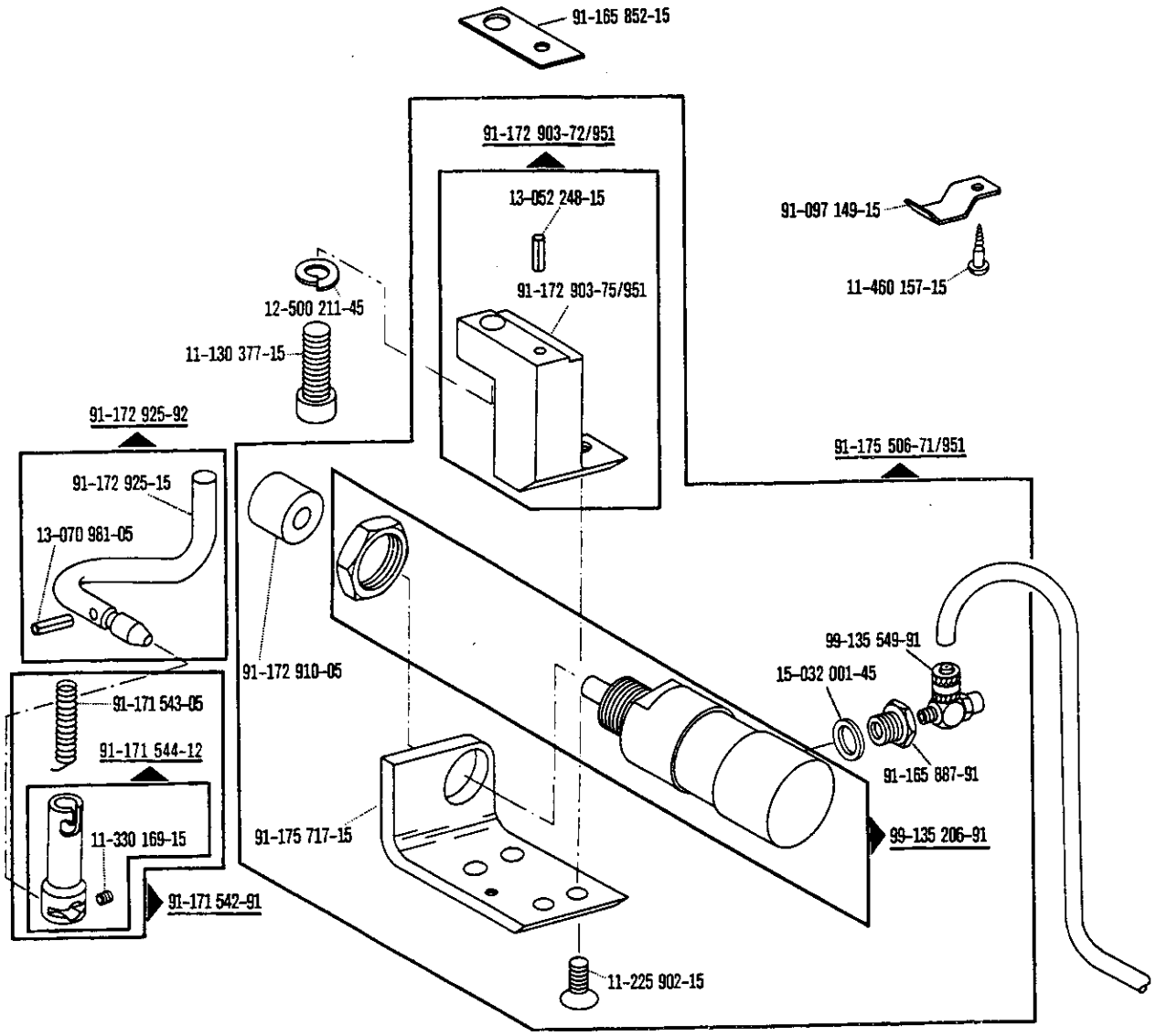

☐ siehe Erläuterungen Register 0
see explanations in section 0
voir légende registre 0
ver explicaciones del registro 0

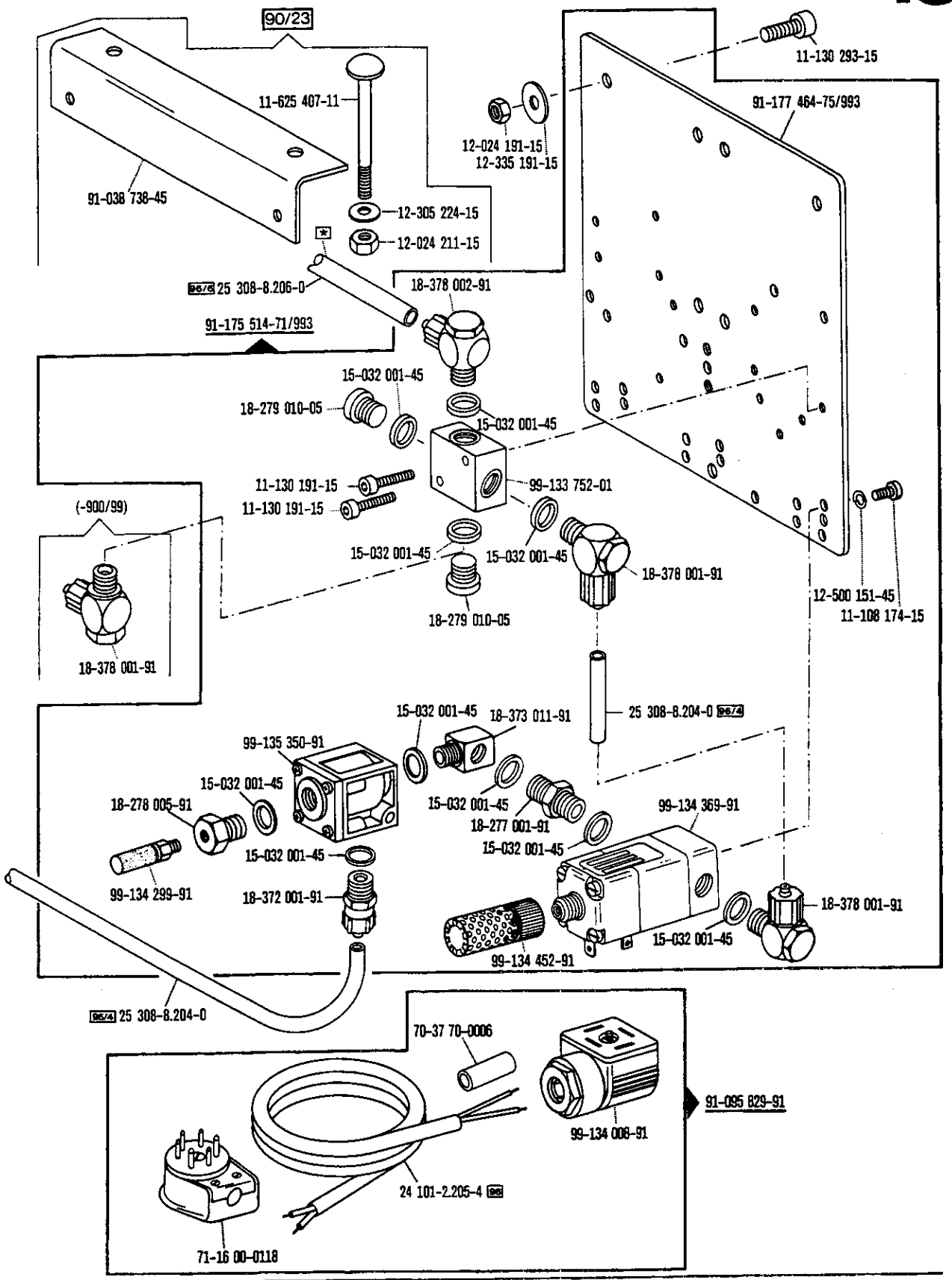

☐ siehe Erläuterungen Register 0
see explanations in section 0
voir légende registre 0
ver explicaciones del registro 0

[*] Zur Wartungseinheit
For conditioning unit
Pour la conditionneur d'air comprimé
Para las requiere grupo acondicionador del aire

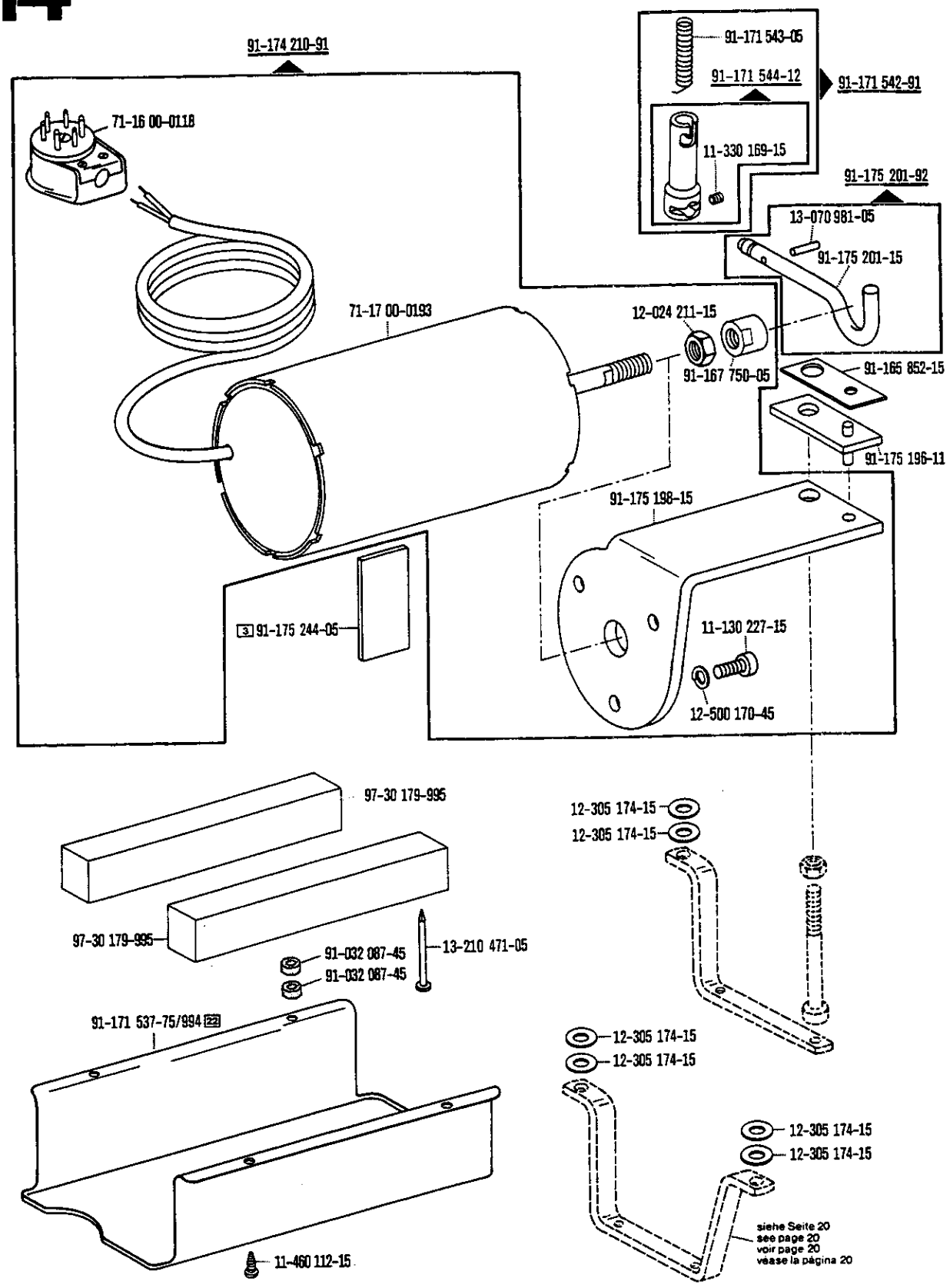

□ siehe Erläuterungen Register 0
see explanations in section 0
voir legende registre 0
ver explicaciones del registro 0

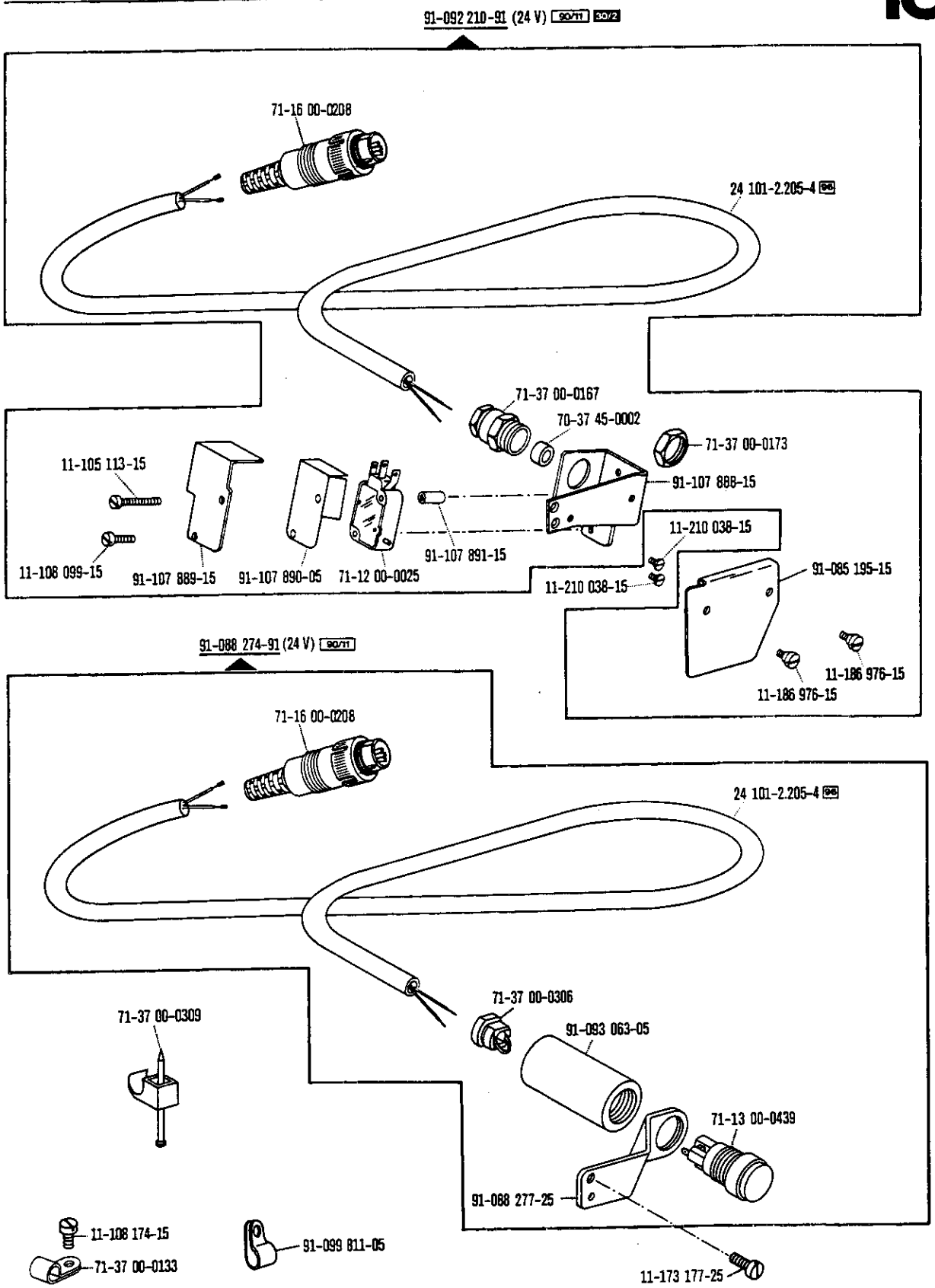
91-092 210-91 (24 V) 90/11 30/2
71-16 00-0208
24 101-2.205-4 96
71-37 00-0167
70-37 45-0002
71-37 00-0173
11-105 113-15
91-107 888-15
11-210 038-15
11-108 099-15
91-107 889-15
91-107 890-05
71-12 00-0025
91-107 891-15
11-210 038-15
91-085 195-15
11-186 976-15
11-186 976-15
91-088 274-91 (24 V) 90/11
71-16 00-0208
24 101-2.205-4 96
71-37 00-0306
71-37 00-0309
91-093 063-05
71-13 00-0439
91-088 277-25
11-108 174-15
71-37 00-0133
91-099 811-05
11-173 177-25

15

Verriegelungs-Einrichtung
Backtacking mechanism
Dispositif à points d'arrêt
Rematador

-910/04*)-911/05 30/0
-911/05 30/0

zur · pour for · para **Pfaff 561; 563; 563 H**

Wartungseinheit -925/02 erforderlich
Conditioning unit -925/02 required
Conditionneur d'air comprimé -925/02 nécessaire
Requiere grupo acondicionador del aire comprimido -925/02

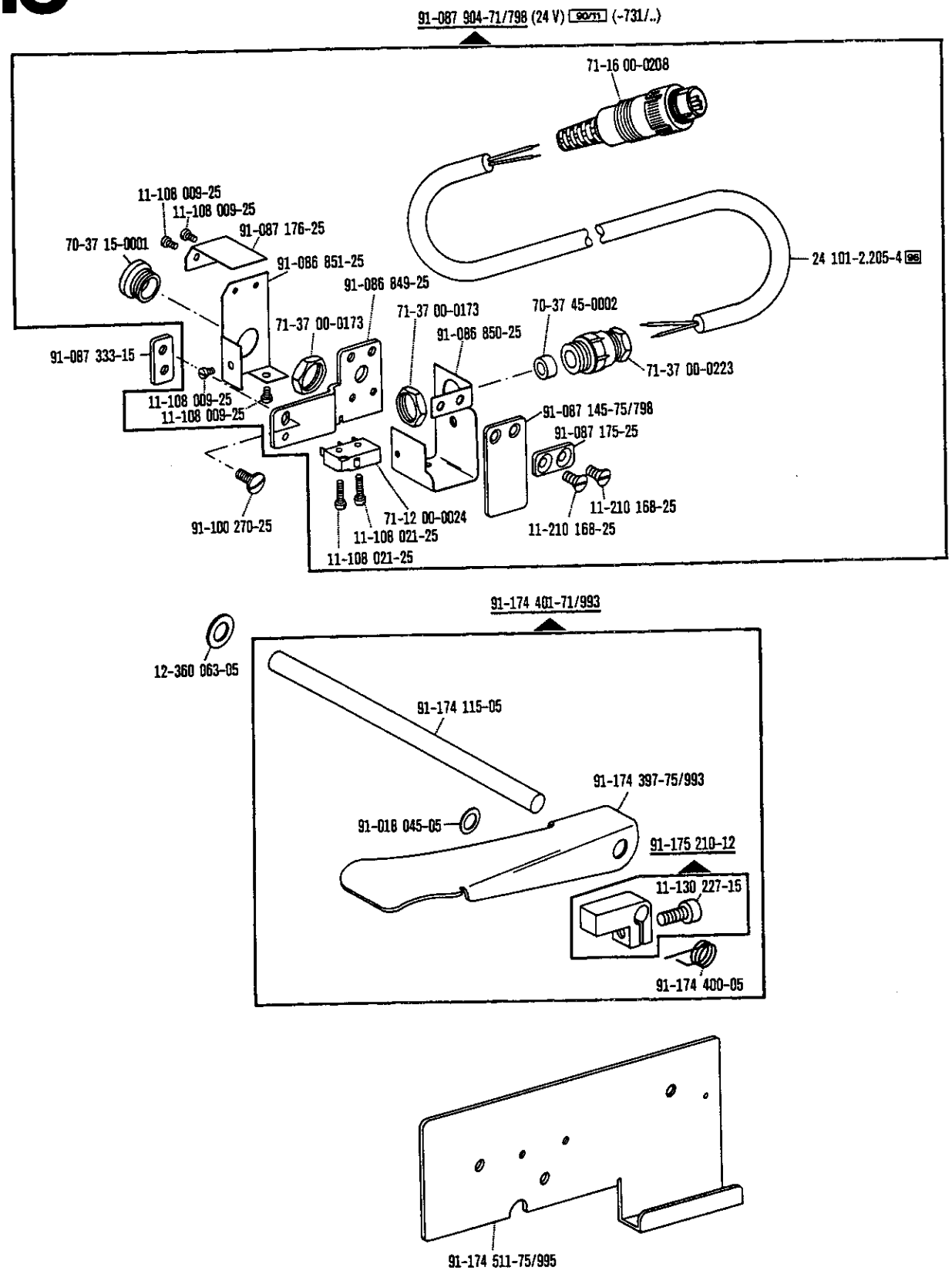

*) Presserfuß-Automatik
Automatic presser foot lifter
Relève-pied automatique
Alzaprensatelas

☐ siehe Erläuterungen Register 0
see explanations in section 0
voir légende registre 0
ver explicaciones del registro 0

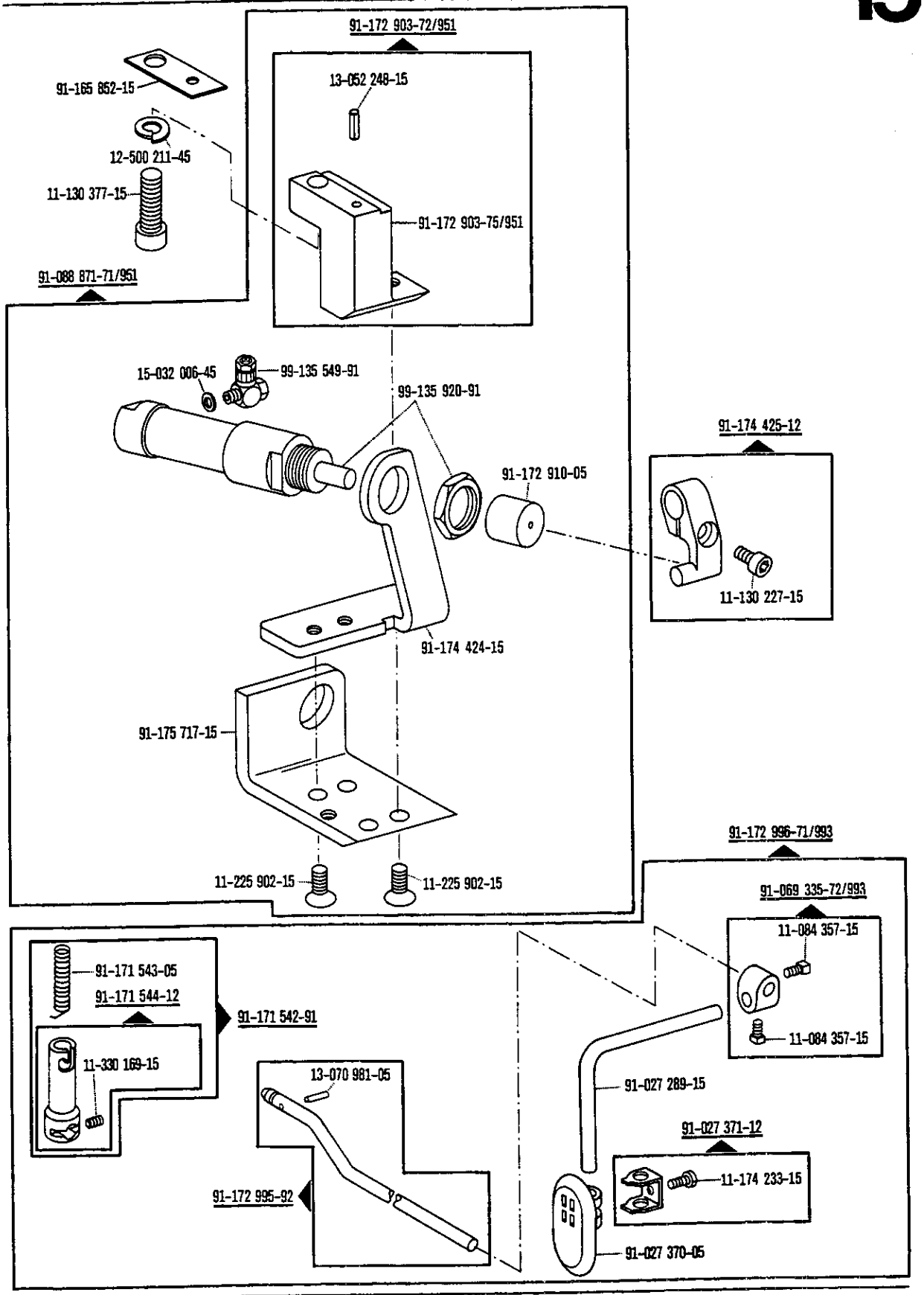
91-172 903-72/951
13-052 248-15
91-165 852-15
12-500 211-45
11-130 377-15
91-172 903-75/951
91-088 871-71/951
15-032 006-45
99-135 549-91
99-135 920-91
91-174 425-12
91-172 910-05
11-130 227-15
91-174 424-15
91-175 717-15
11-225 902-15
11-225 902-15
91-172 996-71/993
91-069 335-72/993
11-084 357-15
11-084 357-15
91-171 543-05
91-171 544-12
91-171 542-91
11-330 169-15
13-070 981-05
91-027 289-15
91-027 371-12
11-174 233-15
91-172 995-92
91-027 370-05

15

Verriegelungs-Einrichtung
Backtacking mechanism
Dispositif à points d'arrêt
Rematador

-911/05 90/0 zur · pour for · para **Pfaff 561; 563; 563H**

Wartungseinheit -925/02 erforderlich
Conditioning unit -925/02 required
Conditionneur d'air comprimé -925/02 nécessaire
Requiere grupo acondicionador del aire comprimido -925/02

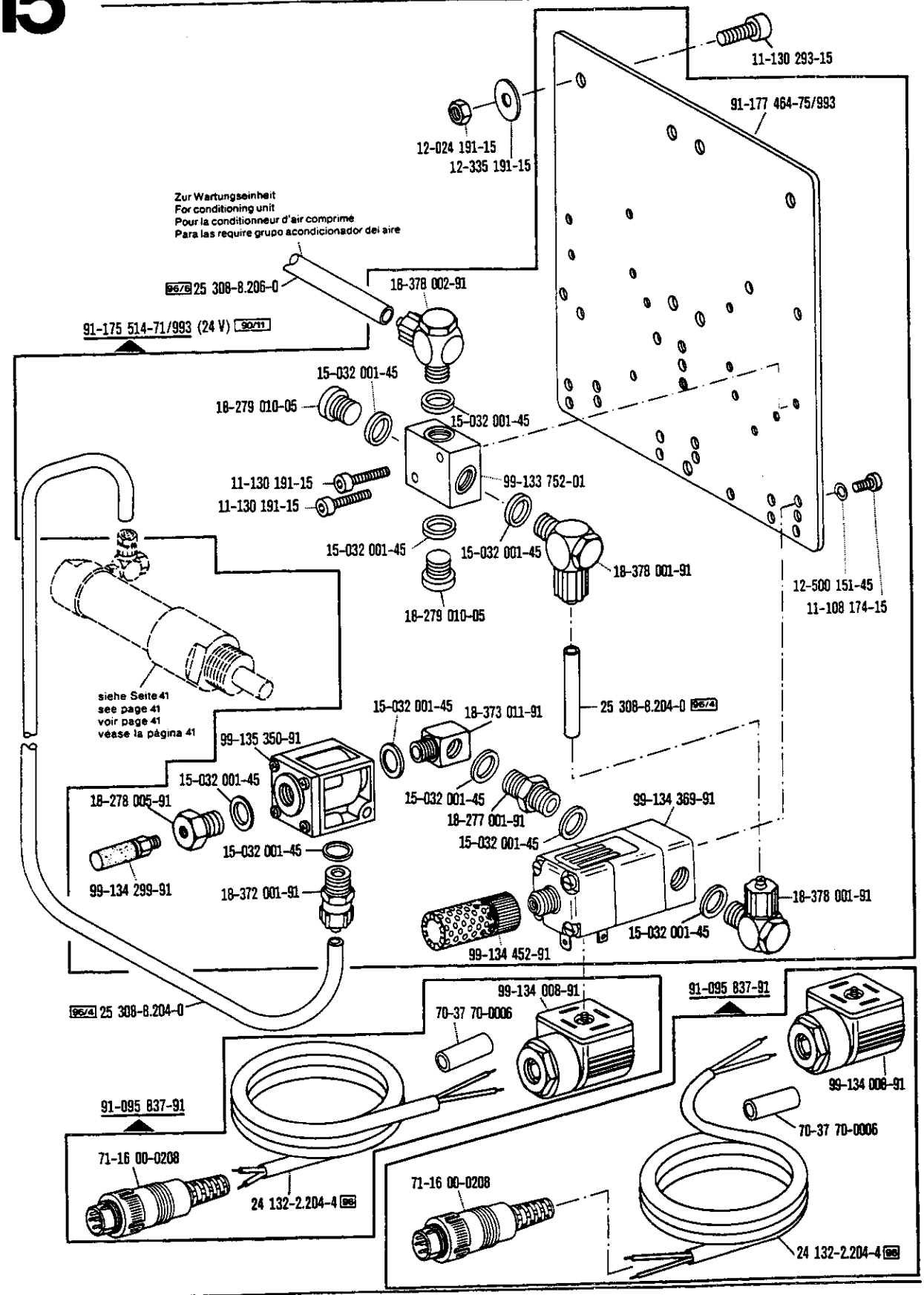

☐ siehe Erläuterungen Register 0
see explanations in section 0
voir légende registre 0
ver explicaciones del registro 0

Verriegelungs-Einrichtung
Backtacking mechanism
Dispositif à points d'arrêt
Rematador

-910/04*)-911/05 30/0 zur · pour for · para **Pfaff 561; 563; 563H**

Wartungseinheit -925/02 erforderlich
Conditioning unit -925/02 required
Conditionneur d'air comprimé -925/02 nécessaire
Requiere grupo acondicionador del aire comprimido -925/02

15

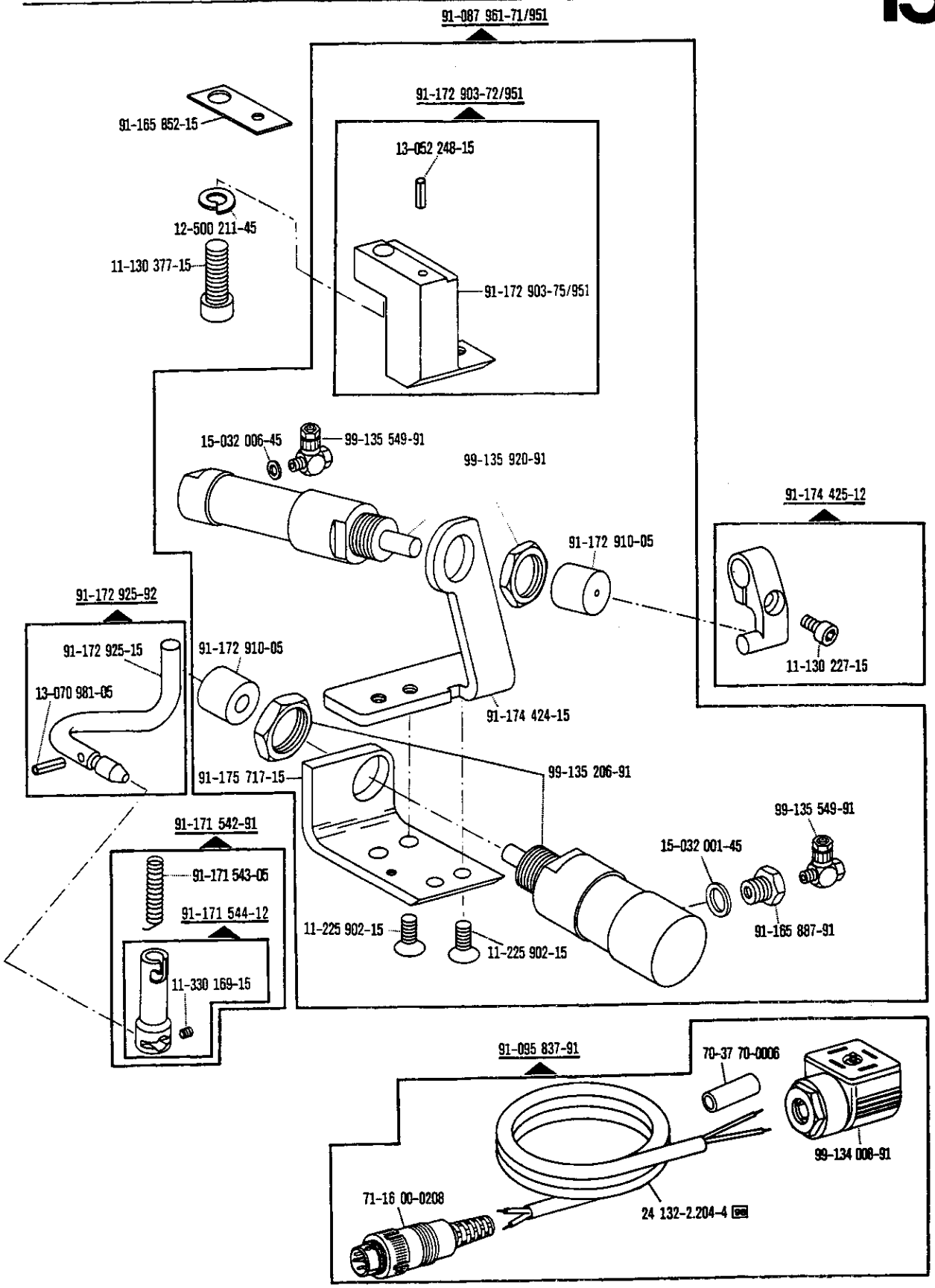

☐ siehe Erläuterungen Register 0
see explanations in section 0
voir légende registre 0
ver explicaciones del registro 0

*) Pressenfuß-Automatik
Automatic presser foot lifter
Relève-pied automatique
Alzaprensatelas

15

Verriegelungs-Einrichtung
Backtacking mechanism
Dispositif à points d'arrêt
Rematador

-910/04*)-911/05 30/0 zur · pour for · para **Pfaff 561; 563; 563H**

Wartungseinheit -925/02 erforderlich
Conditioning unit -925/02 required
Conditionneur d'air comprimé -925/02 nécessaire
Requiere grupo acondicionador del aire comprimido -925/02

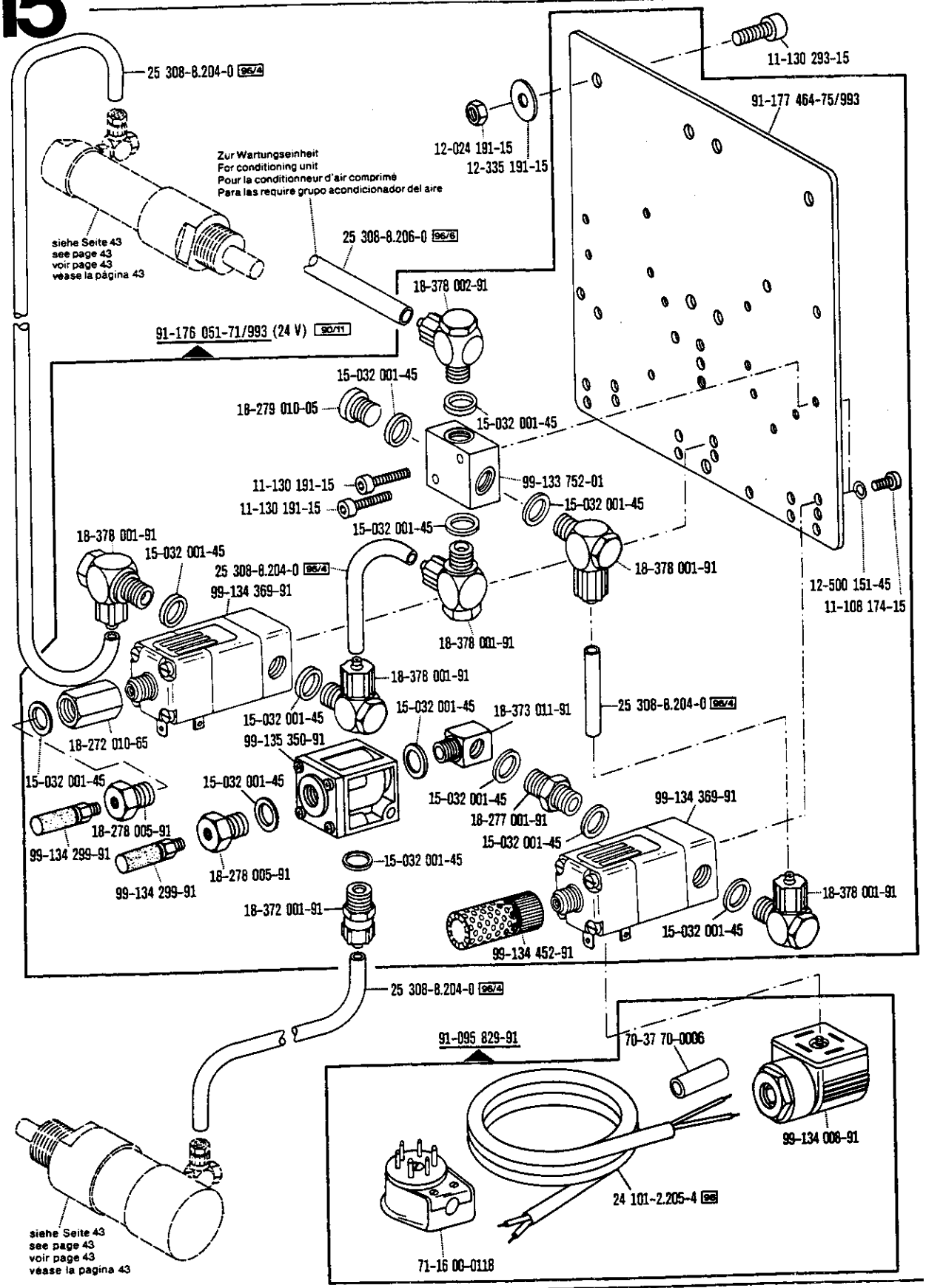

*) Presserfuß-Automatik
Automatic presser foot lifter
Releve-pied automatique
Alzaprensatelas

☐ siehe Erläuterungen Register 0
see explanations in section 0
voir légende registre 0
ver explicaciones del registro 0

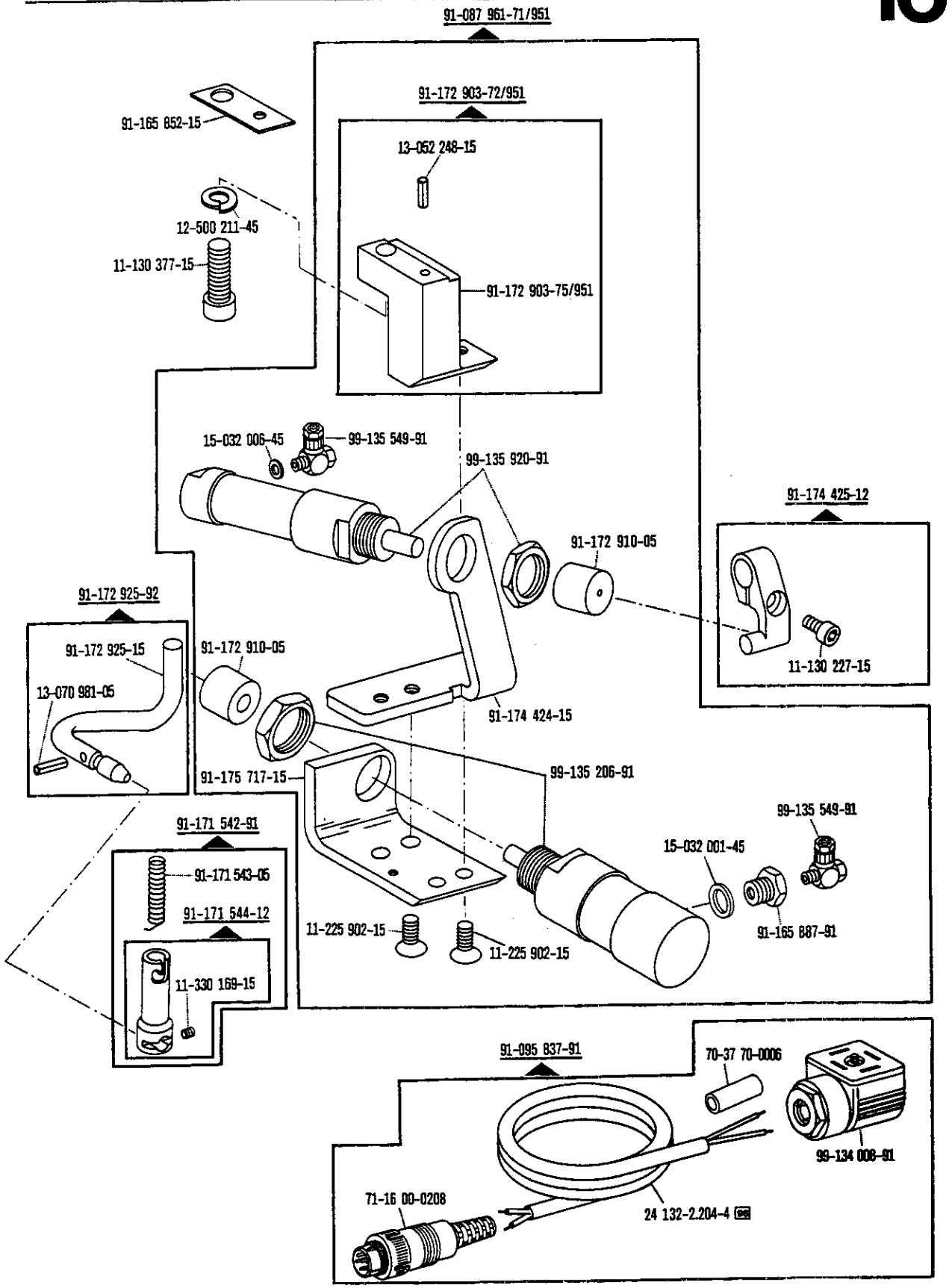
91-087 961-71/951
91-172 903-72/951
91-165 852-15
13-052 248-15
12-500 211-45
11-130 377-15
91-172 903-75/951
15-032 006-45
99-135 549-91
99-135 920-91
91-174 425-12
91-172 910-05
91-172 925-92
91-172 925-15
91-172 910-05
13-070 981-05
11-130 227-15
91-174 424-15
91-175 717-15
99-135 206-91
99-135 549-91
91-171 542-91
15-032 001-45
91-171 543-05
91-171 544-12
11-225 902-15
11-225 902-15
91-165 887-91
11-330 169-15
91-095 837-91
70-37 70-0006
99-134 006-91
71-16 00-0208
24 132-2.204-4

16

Verriegelungs-Einrichtung
Backtacking mechanism
Dispositif à points d'arrêt
Rematador

-911/15*) 90/0
-911/35*)

zur - pour
for - para

Pfaff 561-900/..
Pfaff 563-900/..
Pfaff 563H-900/..

Wartungseinheit -925/02 erforderlich
Conditioning unit -925/02 required
Conditionneur d'air comprimé -925/02 nécessaire
Requiere grupo acondicionador del aire comprimido -925/02

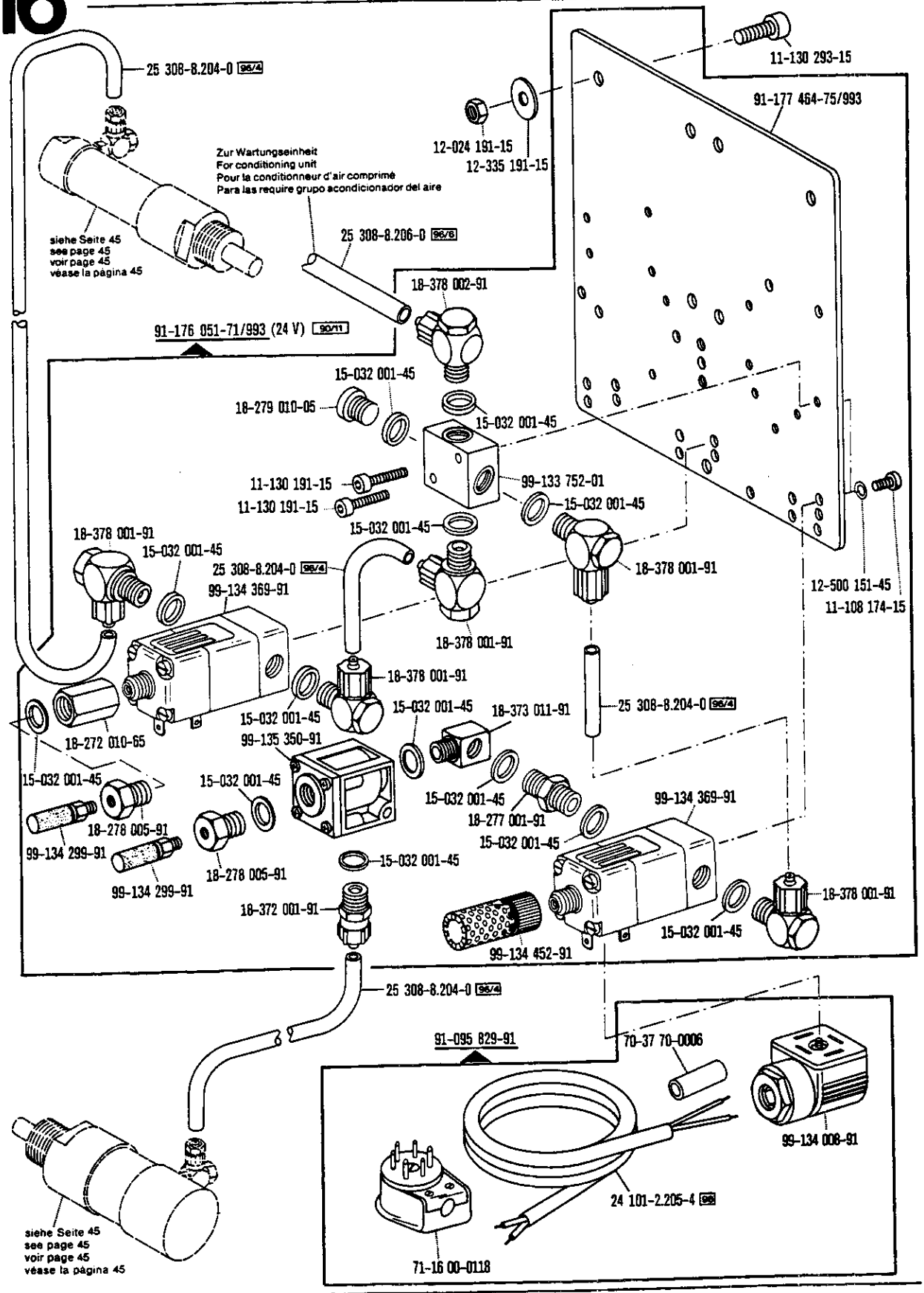

*) Beinhaltet PresserfuBautomatik -910/04
With automatic presser foot lifter -910/04
Relève-pied compris. -910/04
Alzaprensatelas automático -910/04

☐ siehe Erläuterungen Register 0
see explanations in section 0
voir légende registre 0
ver explicaciones del registro 0

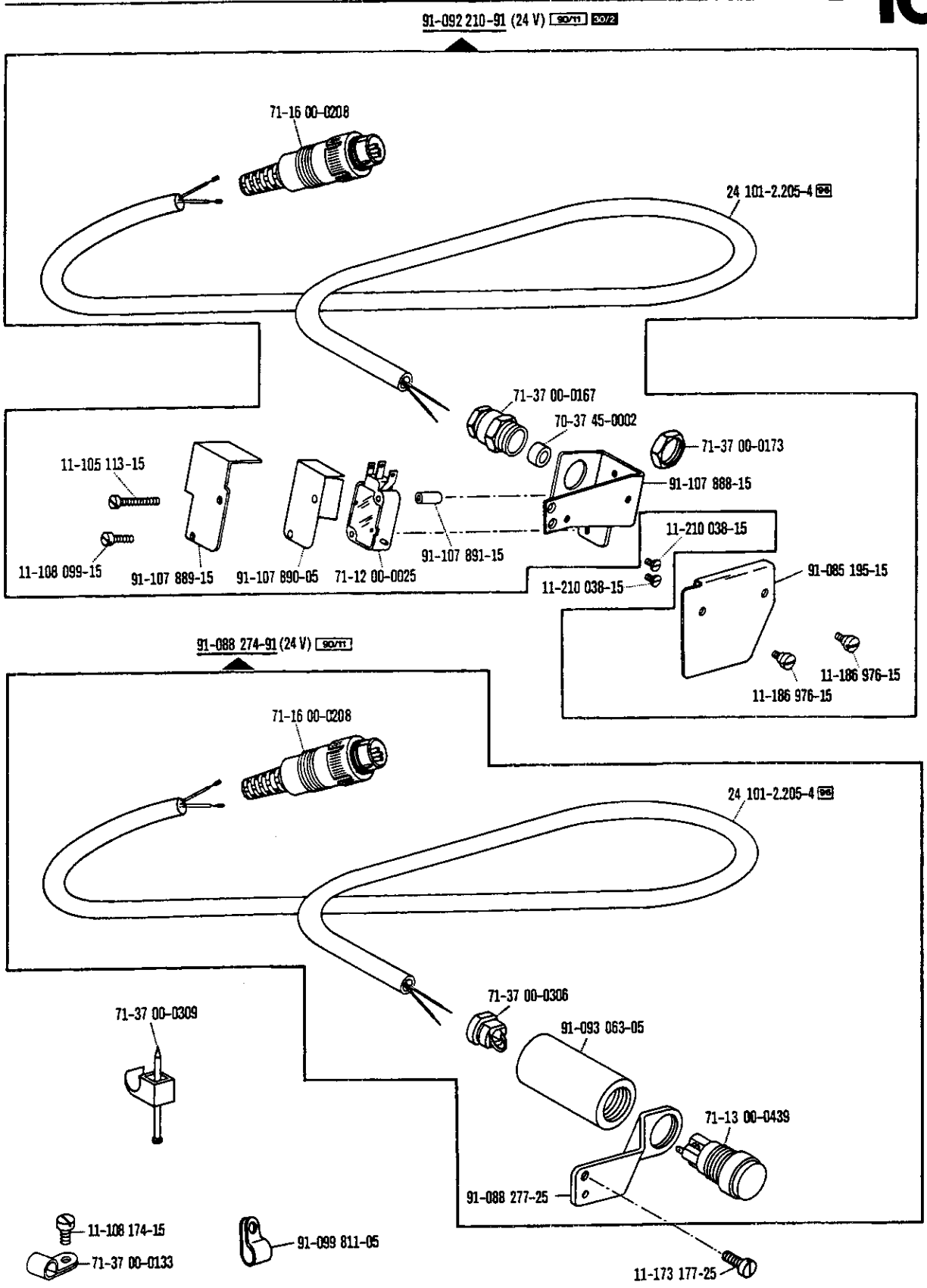
91-092 210-91 (24 V) 90/11 90/2
71-16 00-0208
24 101-2.205-4 96
71-37 00-0167
70-37 45-0002
71-37 00-0173
11-105 113-15
91-107 888-15
11-210 038-15
11-108 099-15
91-107 889-15
91-107 890-05
71-12 00-0025
91-107 891-15
11-210 038-15
91-085 195-15
11-186 976-15
11-186 976-15
91-088 274-91 (24 V) 90/11
71-16 00-0208
24 101-2.205-4 96
71-37 00-0306
71-37 00-0309
91-093 063-05
71-13 00-0439
91-088 277-25
11-108 174-15
71-37 00-0133
91-099 811-05
11-173 177-25

16

Verriegelungs-Einrichtung
Backtacking mechanism
Dispositif à points d'arrêt
Rematador

-911/15*) 90/0
-911/35*)

zur - pour for - para

Pfaff 561-900/..
Pfaff 563-900/..
Pfaff 563H-900/..

Wartungseinheit -925/02 erforderlich
Conditioning unit -925/02 required
Conditionneur d'air comprimé -925/02 nécessaire
Requiere grupo acondicionador del aire comprimido -925/02

91-087 904-71/798 (24 V) 90/11 (-731/..-911/35)

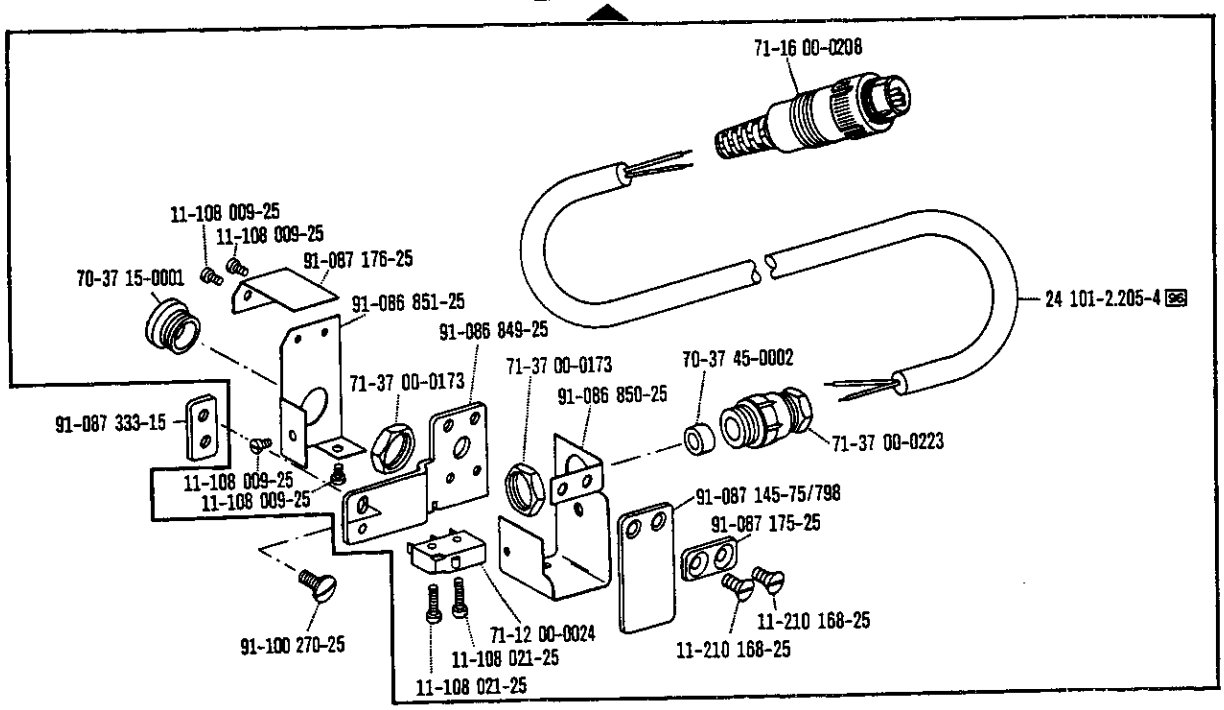

91-174 401-71/993

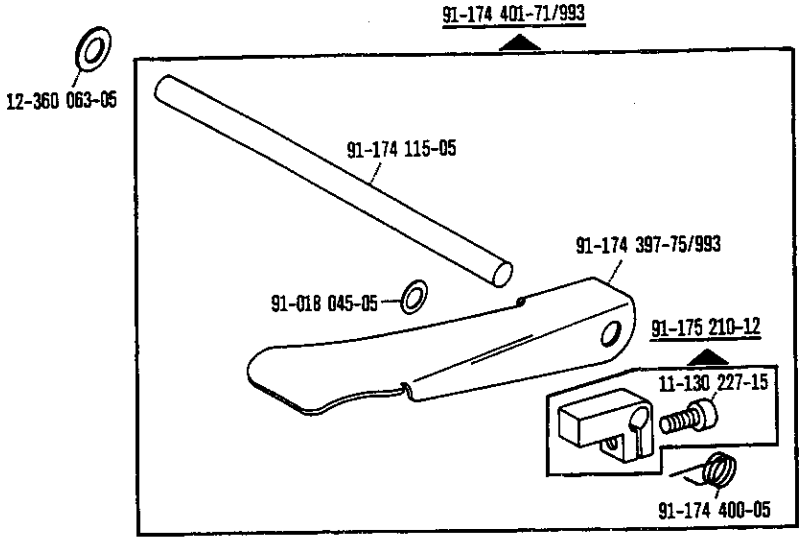

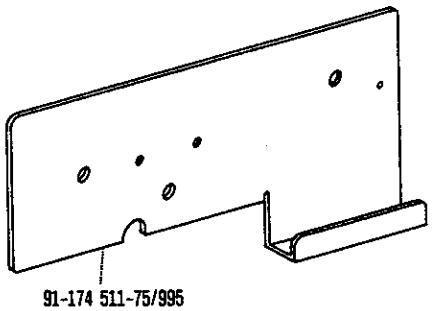

*) Beinhaltet Presserfußautomatik -910/04
With automatic presser foot lifter -910/04
Relève-pied compris. -910/04
Alzaprensatelas automático -910/04

☐ siehe Erläuterungen Register 0
see explanations in section 0
voir légende registre 0
ver explicaciones del registro 0

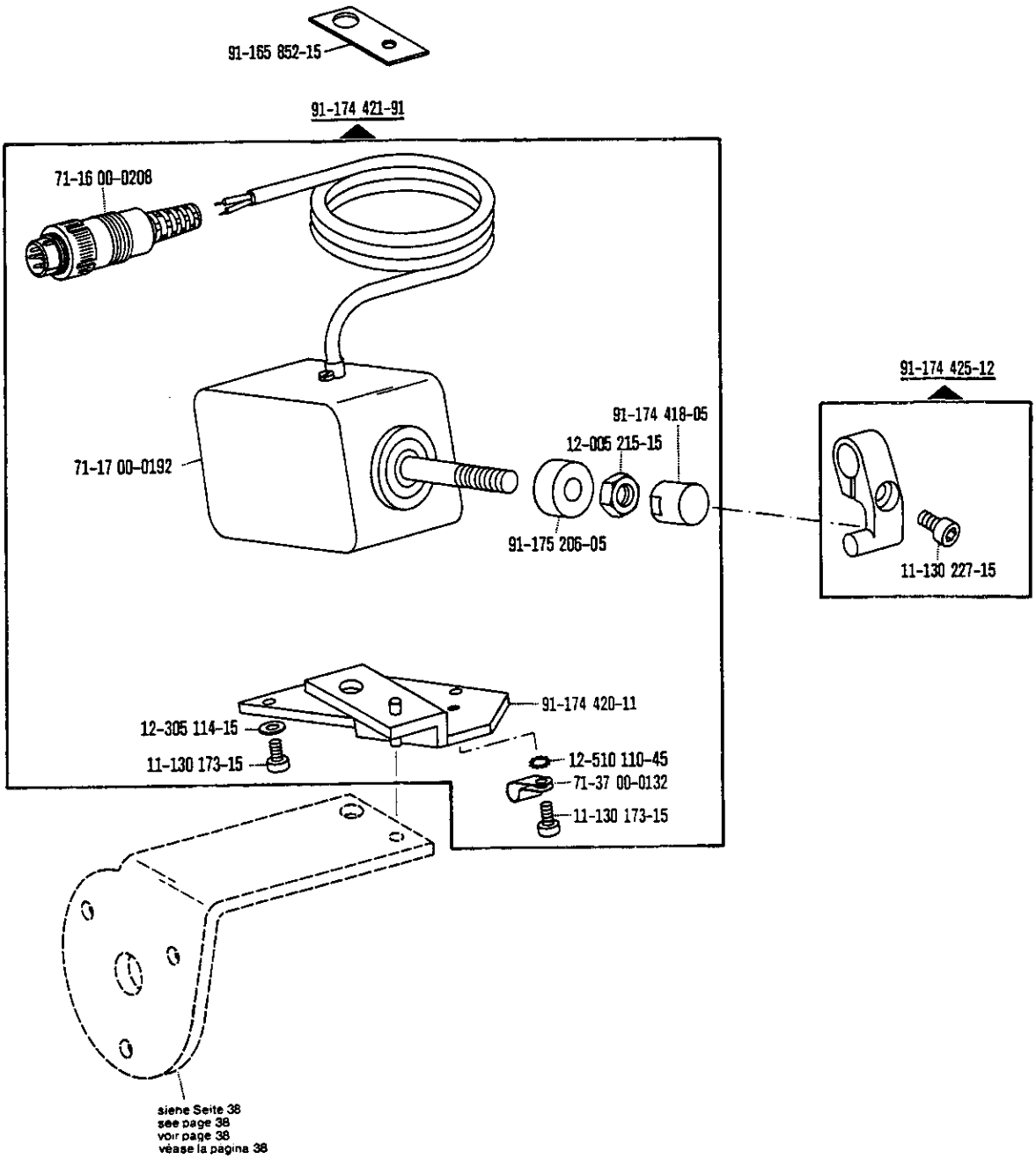
91-165 852-15
91-174 421-91
71-16 00-0208
71-17 00-0192
91-174 418-05
12-005 215-15
91-175 206-05
91-174 425-12
11-130 227-15
91-174 420-11
12-305 114-15
11-130 173-15
12-510 110-45
71-37 00-0132
11-130 173-15
siehe Seite 38
see page 38
voir page 38
véase la página 38

Verriegelungs-Einrichtung
Backtacking mechanism
Dispositif à points d'arrêt
Rematador

-911/17
-911/37
zur · pour
for · para

Pfaff 561-./.-900/57-909/04-910/06
Pfaff 563-./.-900/57-909/04-910/06
Pfaff 563H-./.-900/57-909/04-910/06

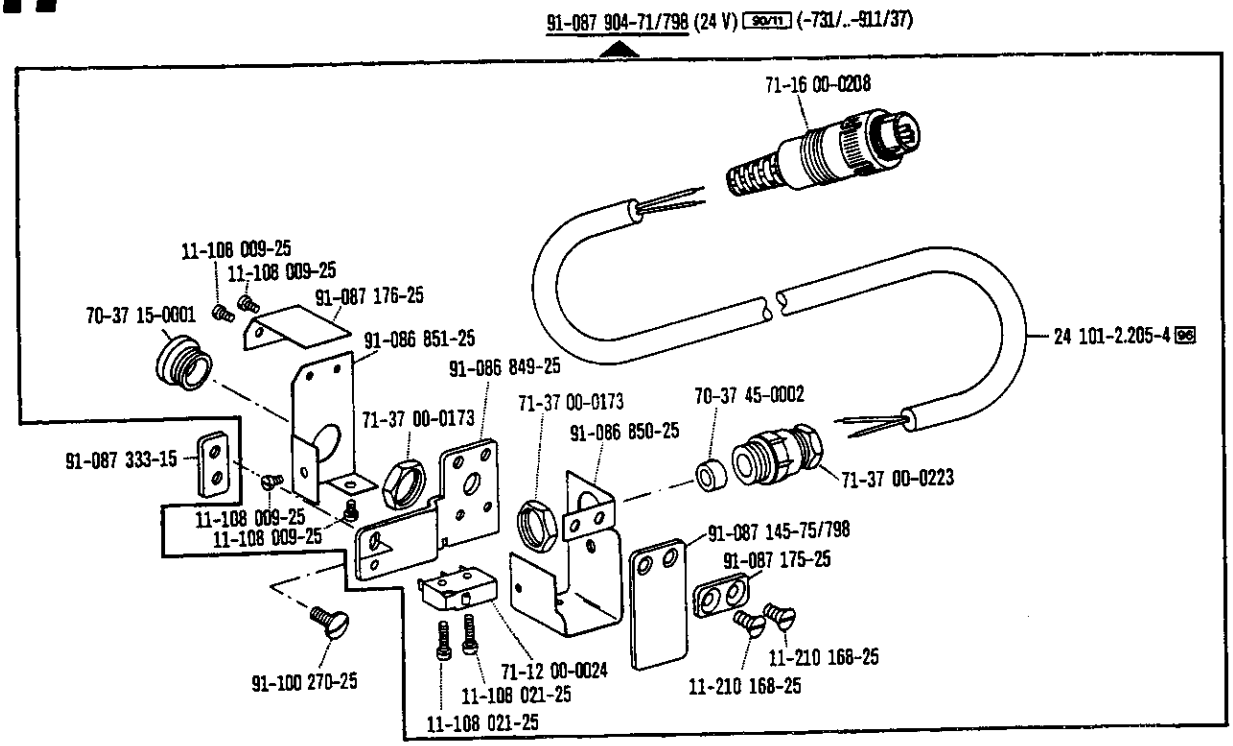

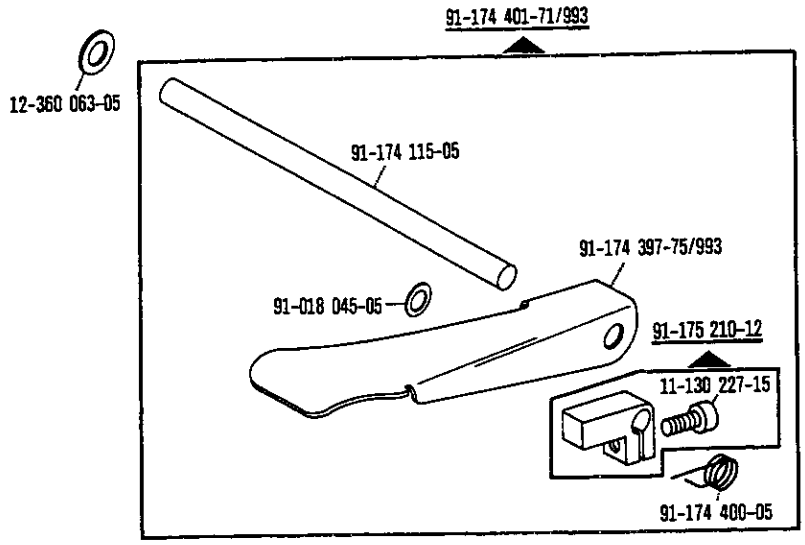

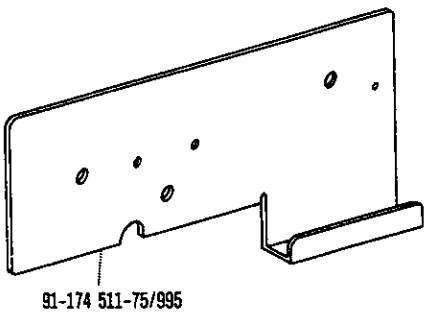

siehe Erläuterungen Register 0
see explanations in section 0
voir légende registre 0
ver explicaciones del registro 0

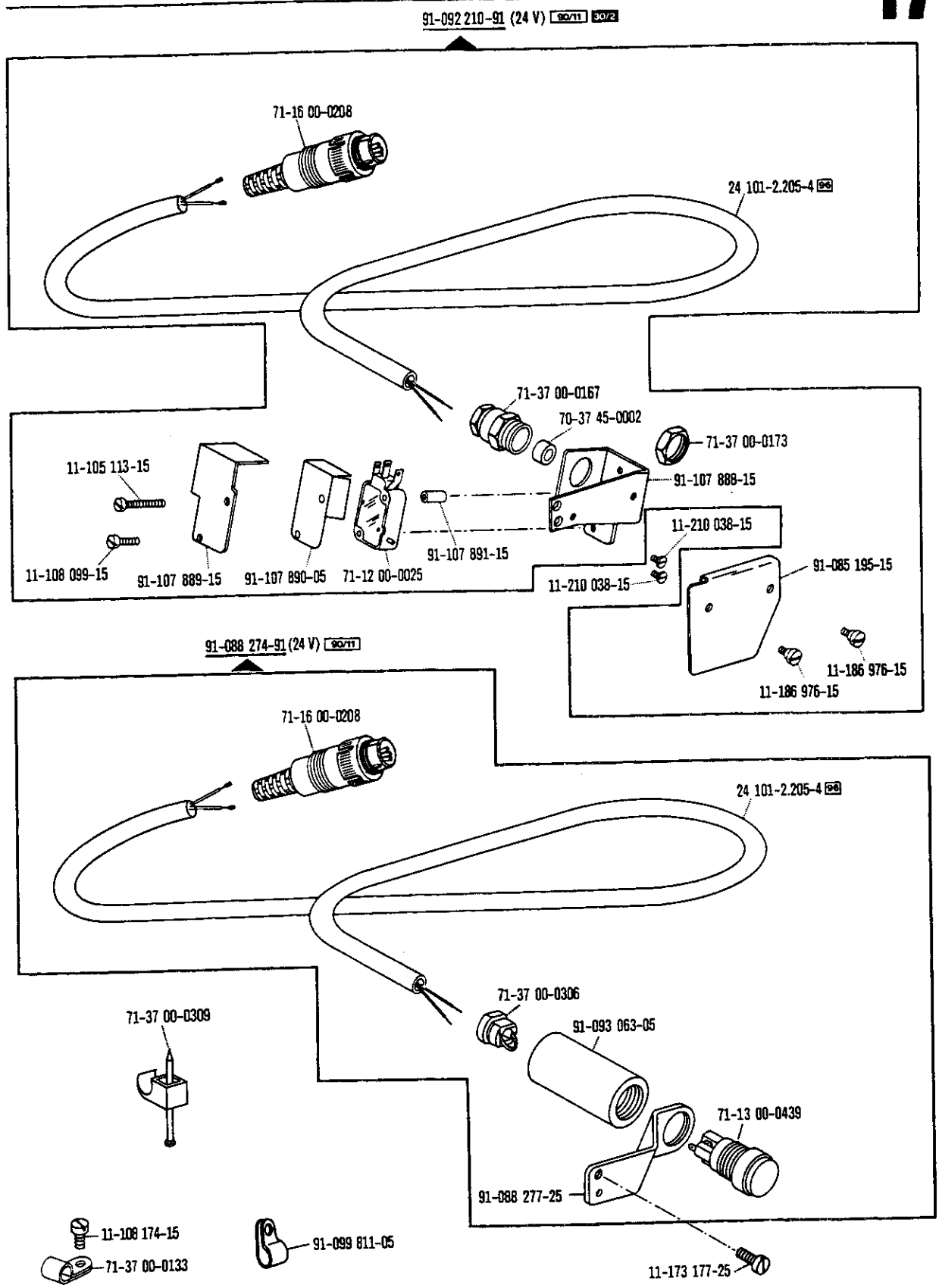

☐ siehe Erläuterungen Register 0
see explanations in section 0
voir légende registre 0
ver explicaciones del registro 0

18

Verriegelungs-Einrichtung
Backtacking mechanism
Dispositif à points d'arrêt
Rematador

-911/95*) zur · pour for · para **Pfaff 561-900/..; 563-900/..; 563H-900/..**

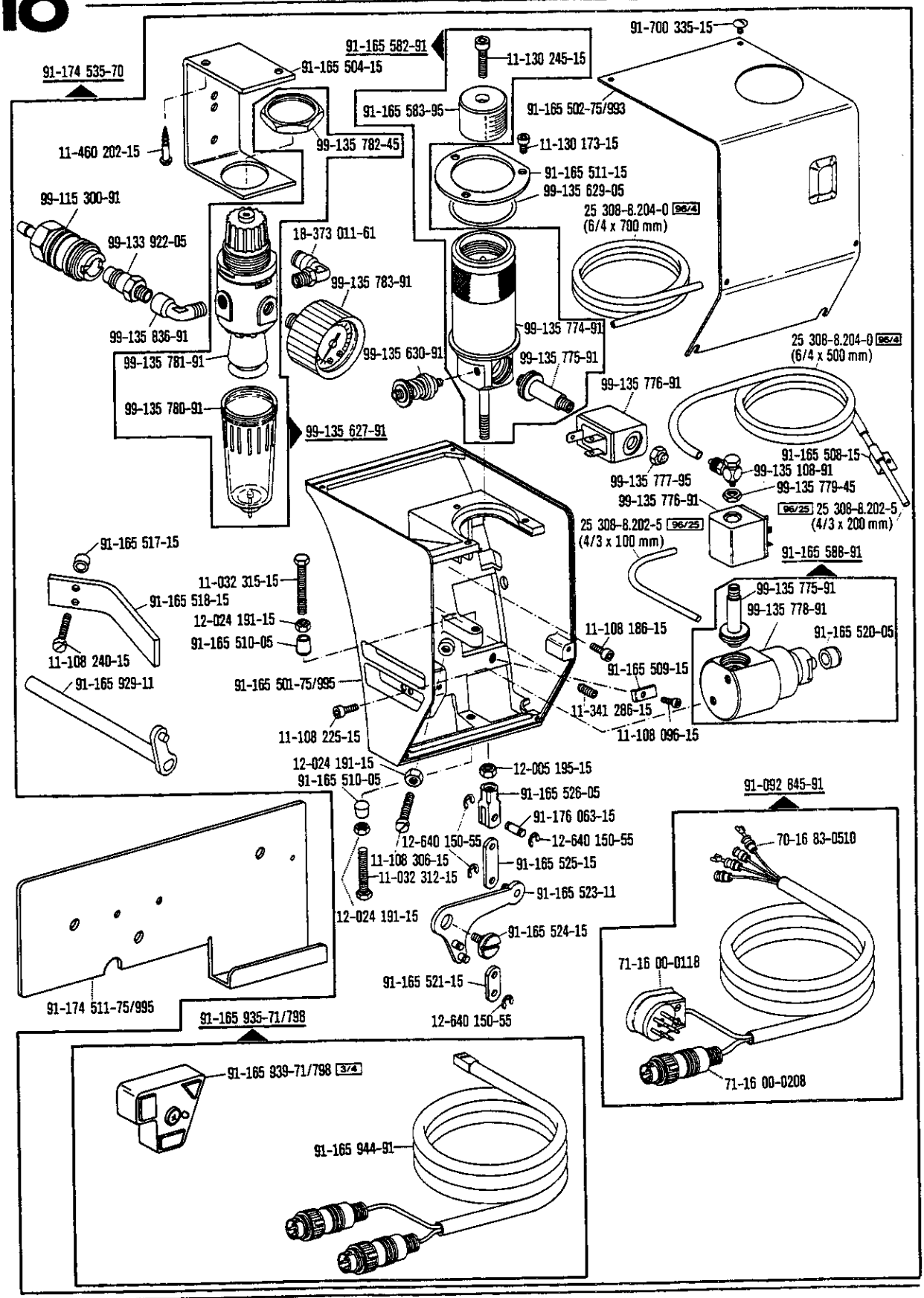

*) Beinhaltet Presserfußautomatik -910/04
With automatic presser foot lifter -910/04
Relève-pied compris. -910/04
Alzaprensatelas automático -910/04

☐ siehe Erläuterungen Register 0
see explanations in section 0
voir légende registre 0
ver explicaciones del registro 0

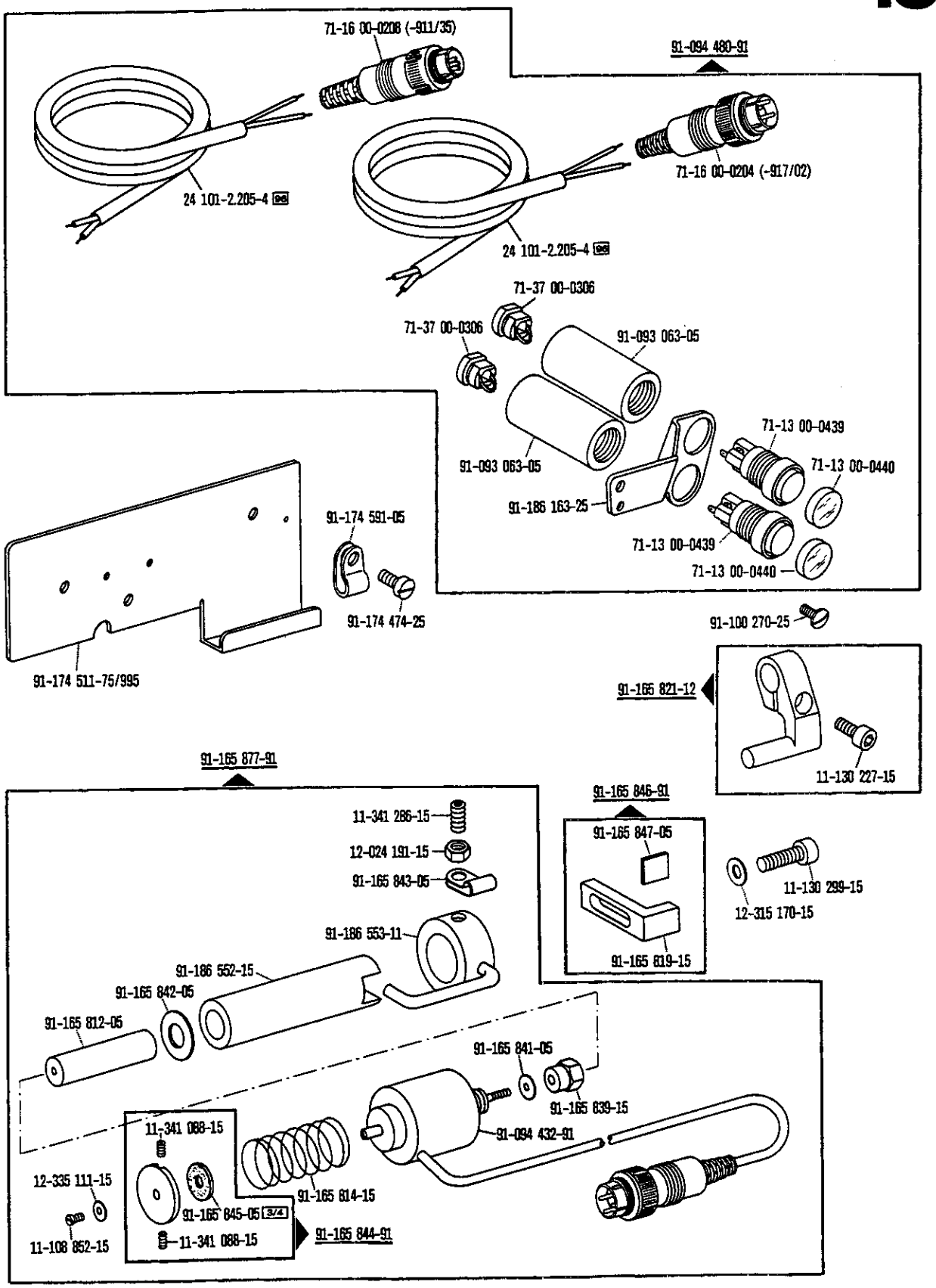
71-16 00-0208 (-911/35)
24 101-2.205-4
91-094 480-91
71-16 00-0204 (-917/02)
24 101-2.205-4
71-37 00-0306
71-37 00-0306
91-093 063-05
91-093 063-05
71-13 00-0439
71-13 00-0440
91-186 163-25
71-13 00-0439
71-13 00-0440
91-174 591-05
91-174 474-25
91-174 511-75/995
91-100 270-25
91-165 821-12
11-130 227-15
91-165 877-91
91-165 846-91
11-341 286-15
12-024 191-15
91-165 843-05
91-165 847-05
91-165 819-15
11-130 299-15
12-315 170-15
91-186 553-11
91-186 552-15
91-165 842-05
91-165 812-05
91-165 841-05
91-165 839-15
91-094 432-91
11-341 088-15
12-335 111-15
11-108 852-15
91-165 845-05 3/4
11-341 088-15
91-165 844-91
91-165 814-15

Wartungseinheit
Air filter / lubricator
Conditionneur d'air comprimé
Grupo acondicionador del aire comprimido

-925/02 zur · pour for · para Pfaff 561; 563

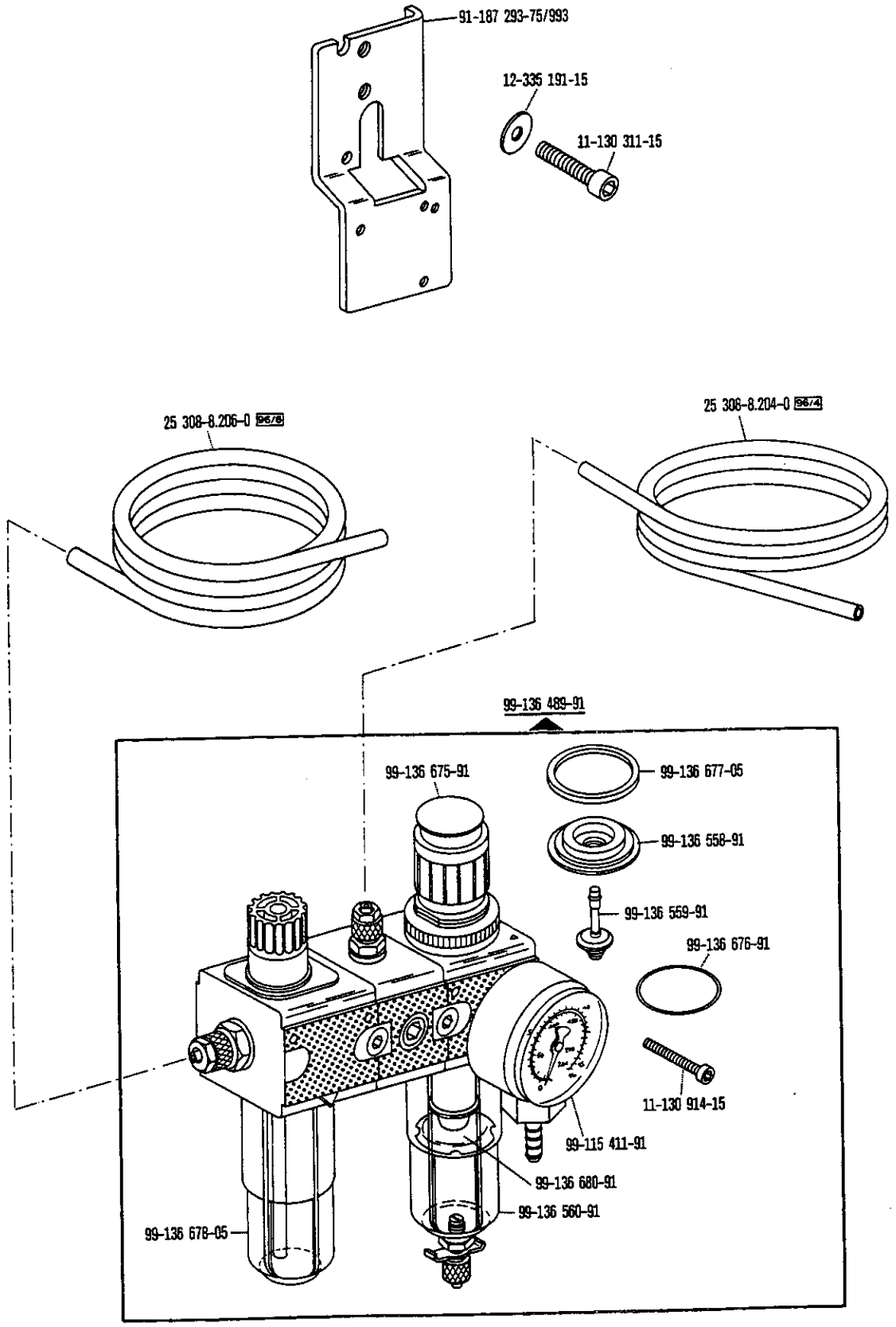

☐ siehe Erläuterungen Register 0
see explanations in section 0
voir légende registre 0
ver explicaciones del registro 0

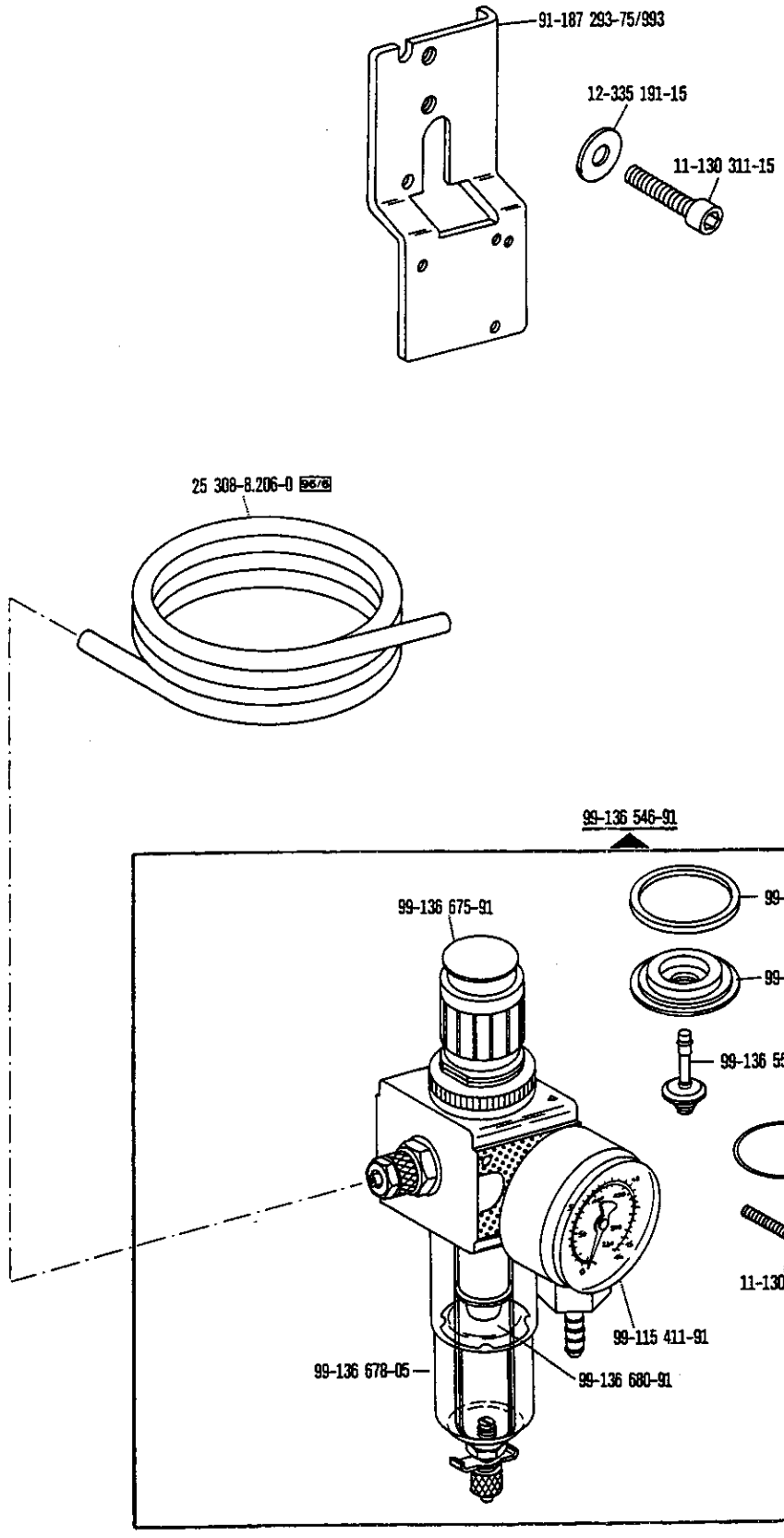
91-187 293-75/993
12-335 191-15
11-130 311-15
25 308-8.206-0 96/8
99-136 546-91
99-136 675-91
99-136 677-05
99-136 558-91
99-136 559-91
99-136 676-91
11-130 914-15
99-115 411-91
99-136 678-05
99-136 680-91

22

Rollfuß-Einrichtung
Roller presser
Dispositif à pied à roulette
Pie rodante

-944/01 zur · pour for · para **Pfaff 563; 563H**

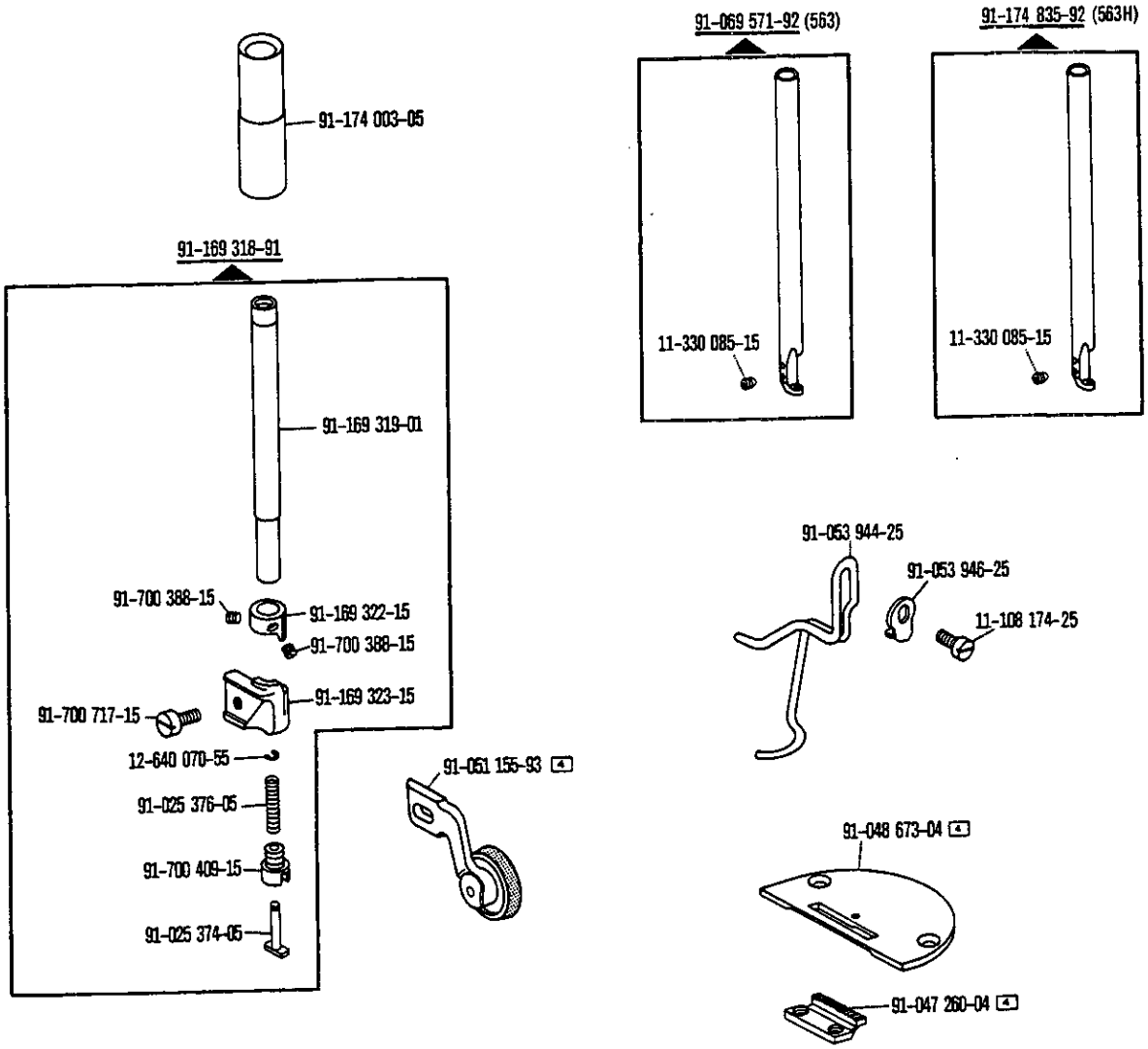

☐ siehe Erläuterungen Register 0
see explanations in section 0
voir légende registre 0
ver explicaciones del registro 0

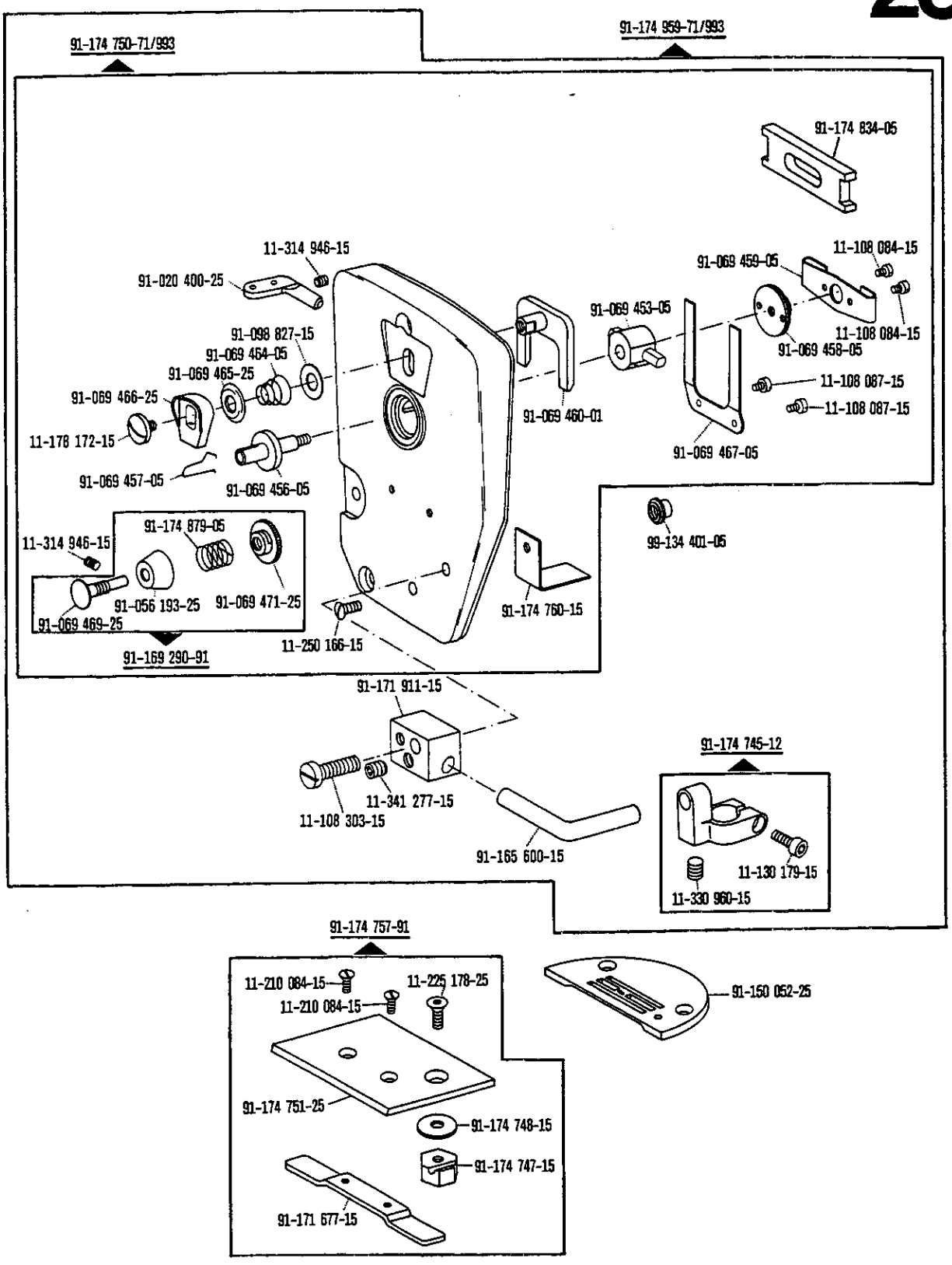
91-174 750-71/993
91-174 959-71/993
91-174 834-05
11-314 946-15
91-020 400-25
91-098 827-15
91-069 454-05
91-069 465-25
91-069 466-25
11-178 172-15
91-069 457-05
91-069 456-05
91-069 460-01
91-069 453-05
91-069 459-05
11-108 084-15
11-108 084-15
91-069 458-05
11-108 087-15
11-108 087-15
91-069 467-05
99-134 401-05
91-174 760-15
11-250 166-15
11-314 946-15
91-174 879-05
91-056 193-25
91-069 471-25
91-069 469-25
91-169 290-91
91-171 911-15
11-341 277-15
11-108 303-15
91-165 600-15
91-174 745-12
11-130 179-15
11-330 960-15
91-174 757-91
11-210 084-15
11-225 178-25
11-210 084-15
91-150 052-25
91-174 751-25
91-174 748-15
91-174 747-15
91-171 677-15

23

Fotozellensteuerung mit Durchlichtsensor
Photocell control with shine-through sensor
Contrôle par cellule photo-electrique avec détecteur par transparence
Control por fotocélula con sensor al-trasluz

-972/33 zur · pour for · para **Pfaff 563-900/57; -910/06; -911/37**

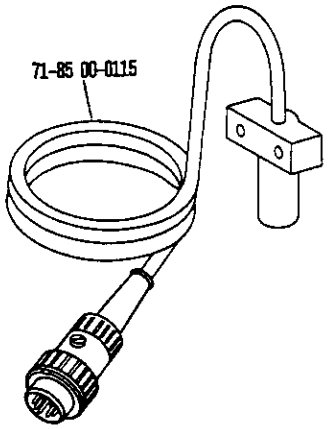

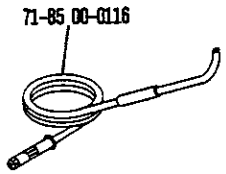

24

Einstellehren
Adjustment gauges
Calibres
Calibres de ajuste zur · pour for · para **Pfaff 561; 563; 563H**

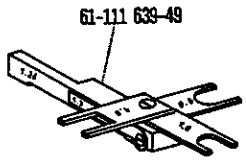

☐ siehe Erläuterungen Register 0
see explanations in section 0
voir légende registre 0
ver explicaciones del registro 0

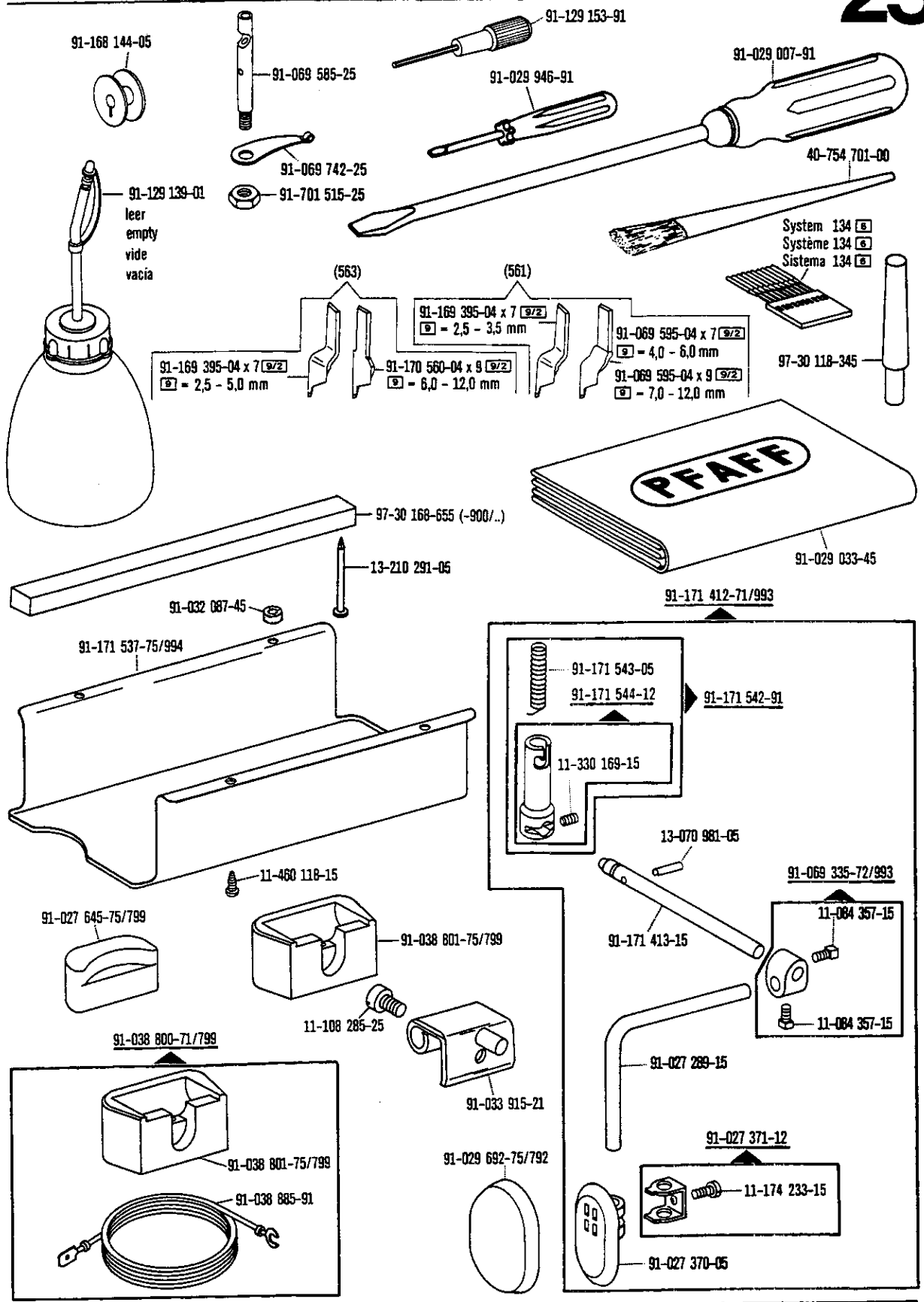

☐ siehe Erläuterungen Register 0
see explanations in section 0
voir légende registre 0
ver explicaciones del registro 0

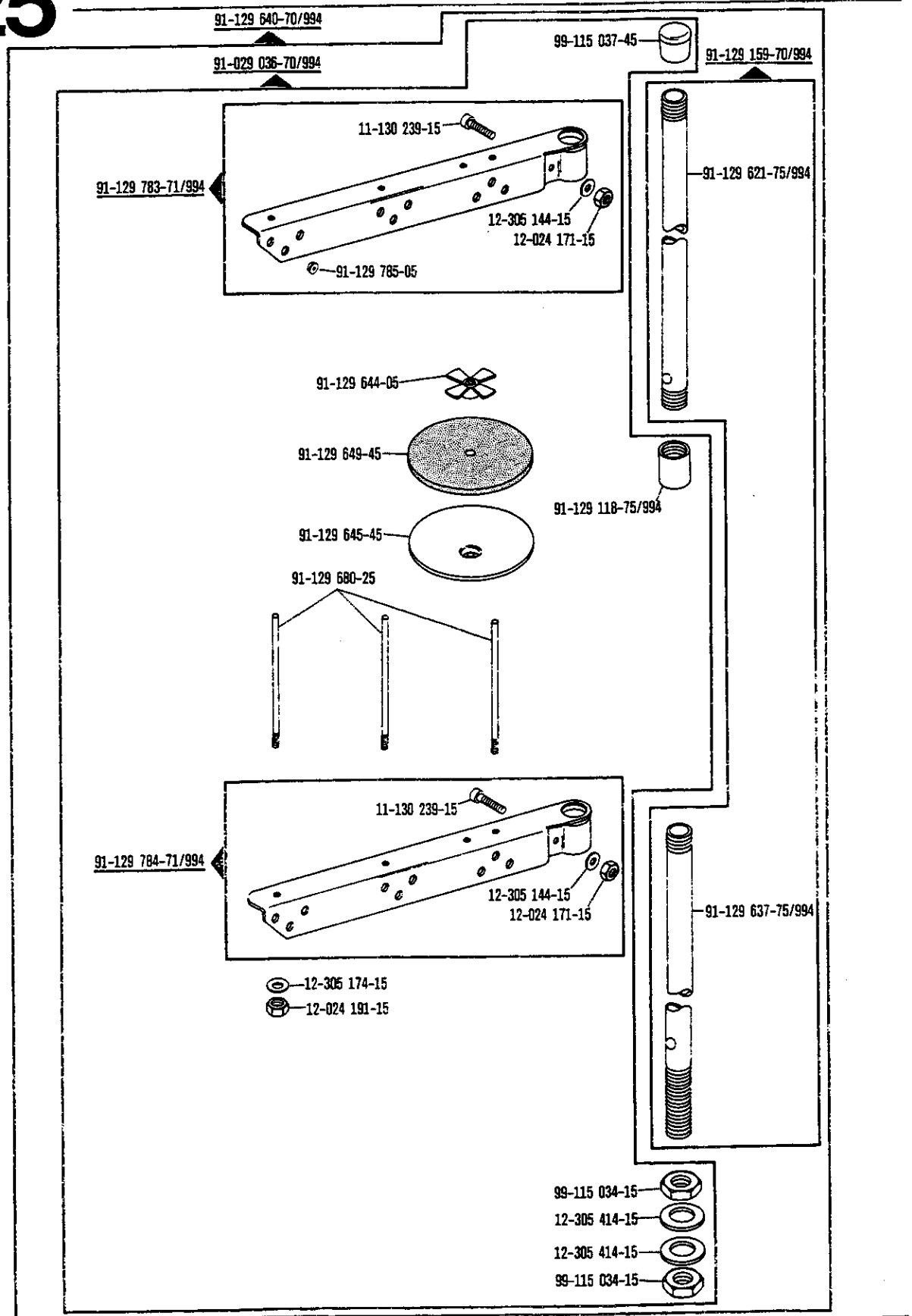

siehe Erläuterungen Register 0
see explanations in section 0
voir legende registre 0
ver explicaciones del registro 0

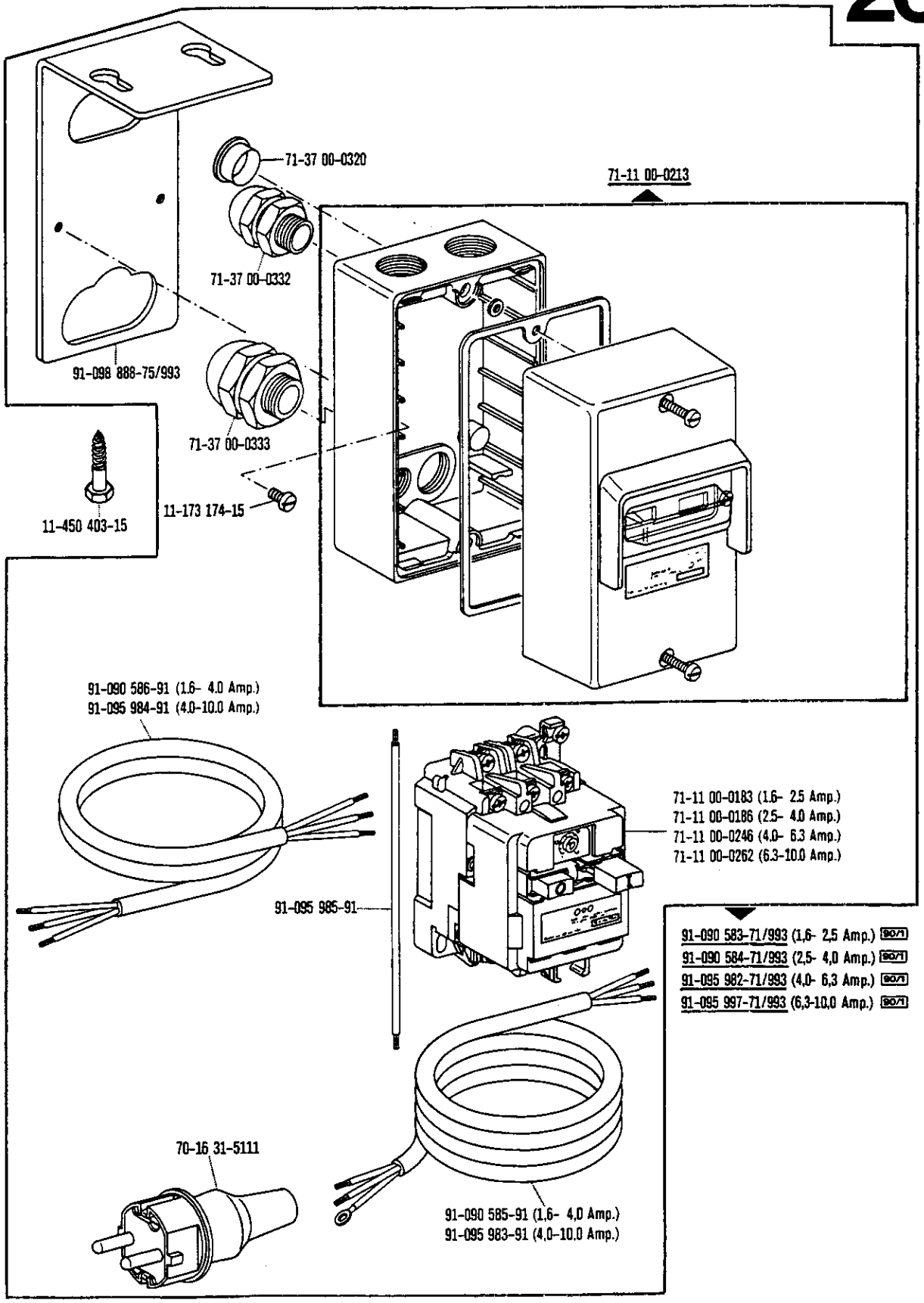
71-37 00-0320
71-37 00-0332
91-098 888-75/993
71-37 00-0333
11-450 403-15
11-173 174-15
71-11 00-0213
91-090 586-91 (1.6- 4.0 Amp.)
91-095 984-91 (4.0-10.0 Amp.)
91-095 985-91
71-11 00-0183 (1.6- 2.5 Amp.)
71-11 00-0186 (2.5- 4.0 Amp.)
71-11 00-0246 (4.0- 6.3 Amp.)
71-11 00-0262 (6.3-10.0 Amp.)
91-090 583-71/993 (1,6- 2,5 Amp.) 90/1
91-090 584-71/993 (2,5- 4,0 Amp.) 90/1
91-095 982-71/993 (4,0- 6,3 Amp.) 90/1
91-095 997-71/993 (6,3-10,0 Amp.) 90/1
70-16 31-5111
91-090 585-91 (1,6- 4,0 Amp.)
91-095 983-91 (4,0-10,0 Amp.)

26

Motoranschlußsatz
Motor connection kit
Jeu de pièces à raccorder le moteur
Juego de piezas de conexión del motor

(Ausrüstung mit Motorschutzschalter)
(equipment with motor overload trip)
(avec contacteur-disjoncteur)
(con interruptor de seguridad)

zur · pour for · para **Pfaff 561; 563; 563H**

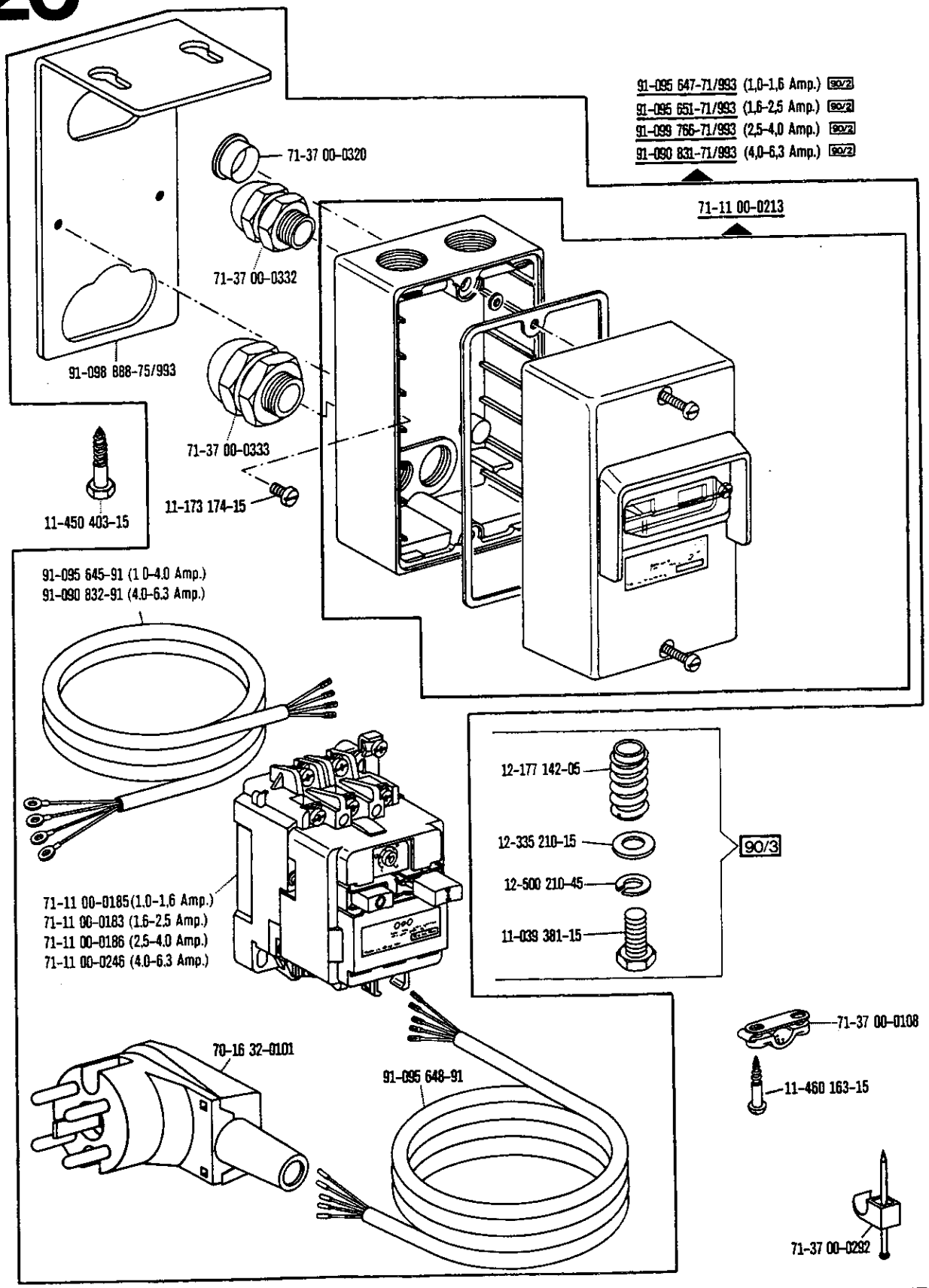

☐ siehe Erläuterungen Register 0
see explanations in section 0
voir légende registre 0
ver explicaciones del registro 0

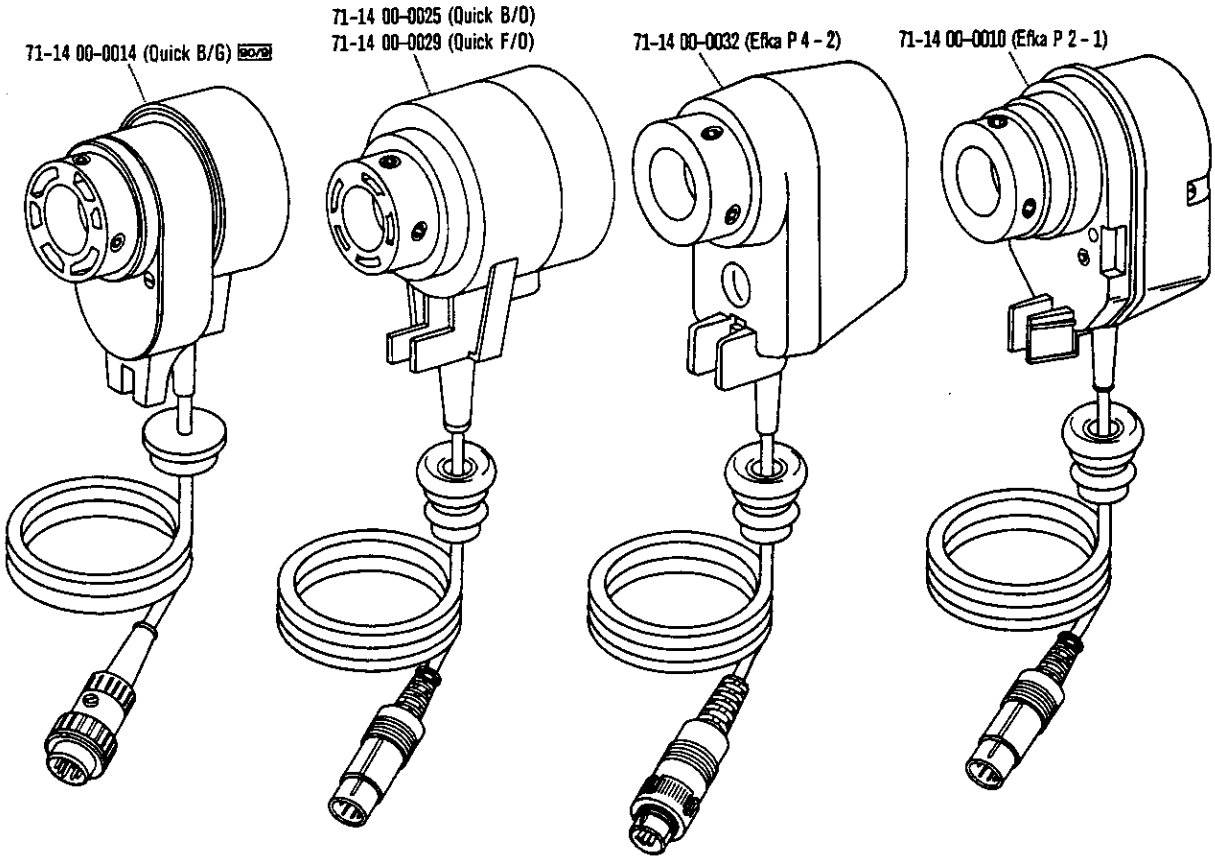
71-14 00-0014 (Quick B/G) ISO/DE
71-14 00-0025 (Quick B/O)
71-14 00-0029 (Quick F/O)
71-14 00-0032 (Efka P 4 - 2)
71-14 00-0010 (Efka P 2 - 1)

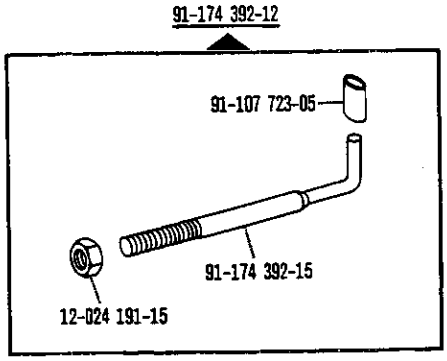
91-174 392-12
91-107 723-05
91-174 392-15
12-024 191-15

Keilriemenscheiben-Tabelle
Table of V-belt pulleys
Tableau des poulies à gorge en V
Tabla de poleas para correas en „V"

Nähgeschwindigkeit max. Stiche/min Maximum sewing speed in s.p.m. Nombre de points max./mn Número máx. de puntadas por minuto	Motordrehzahl U/min Motor speed in r.p.m. Régime moteur en tours/mn Régimen del motor en r.p.m.	Frequenz Frequency Fréquence Frecuencia	Handrad-Durchmesser[1] in mm Balance wheel diameter[1] in mm Diamètre du volant[1] en mm Diámetro del volante[1] en mm	Keilriemenscheiben-Durchmesser[1] in mm V-belt pulley diameter[1] in mm Diamètre de la poulie à gorge[1] en mm Diámetro de la polea para correa en „V"[1] en mm	Teilenummer der Keilriemenscheibe Part number of V-belt pulley Numéro de pièce des poulies à gorge en V Nº de las piezas de poleas para correas en „V"
Pfaff 561					
5000	3400	60 Hz	65	95	16-437 080-55
5000	2800	50 Hz	65	118	16-437 120-55
4800	3400	60 Hz	65	90	16-437 070-55
4800	2800	50 Hz	65	112	16-437 110-55
4500	3400	60 Hz	65	85	16-437 060-55
4500	2800	50 Hz	65	106	16-437 100-55
Pfaff 563; 563H					
5000	3400	60 Hz	65	95	16-437 080-55
5000	2800	50 Hz	65	118	16-437 120-55
4000	3400	60 Hz	65	80	16-437 050-55
4000	2800	50 Hz	65	95	16-437 080-55
3800	3400	60 Hz	65	75	16-437 040-55
3800	2800	50 Hz	65	90	16-437 070-55
3500	3400	60 Hz	65	67	16-437 020-55
3500	2800	50 Hz	65	80	16-437 050-55
3000	1700	60 Hz	65	118	16-437 120-55
3000	1400	50 Hz	65	140	16-437 140-55
2300	1700	60 Hz	65	90	16-437 070-55
2300	1400	50 Hz	65	112	16-437 110-55

[1] Wirksamer Durchmesser
Effective diameter
Diamètre effectif
Diámetro efectivo

☐ siehe Erlauterungen Register 0
see explanations in section 0
voir legende registre 0
ver explicaciones del registro 0

No.	Seite Page Pages Página
11-032 312-15	52
11-032 315-15	52
11-039 177-15	25
11-039 291-15	34
11-039 381-15	62
11-039 992-15	31
11-084 357-15	41, 59
11-105 113-15	39, 47, 51
11-108 009-25	40, 48, 50
11-108 021-25	40, 48, 50
11-108 084-15	11, 28, 30, 57
11-108 087-15	11, 28, 30, 57
11-108 093-15	15
11-108 096-15	25, 52
11-108 099-15	39, 47, 51
11-108 135-15	25
11-108 174-15	37, 39, 42, 44, 46, 47, 51
11-108 174-25	56
11-108 180-15	33
11-108 186-15	52
11-108 222-15	28, 30
11-108 225-15	11, 19, 23, 52
11-108 234-15	32
11-108 240-15	11, 52
11-108 285-15	35
11-108 285-25	59
11-108 303-15	57
11-108 306-15	52
11-108 315-15	31
11-108 846-15	17
11-108 852-15	53
11-108 864-25	26, 33
11-130 092-15	26, 31
11-130 101-15	33
11-130 167-15	33
11-130 173-15	25, 26, 49, 52
11-130 176-15	12, 16, 17, 18, 20, 25
11-130 179-15	57
11-130 191-15	37, 42, 44, 46
11-130 224-15	12, 18, 20, 23, 25, 26, 27, 29, 35
11-130 227-15	25, 38, 40, 41, 43, 45, 48, 49, 50, 53
11-130 233-15	25
11-130 239-15	25, 27, 29, 33, 60
11-130 245-15	26, 52
11-130 257-15	20, 31
11-130 284-15	16
11-130 285-15	28, 30
11-130 287-15	20, 23
11-130 293-15	37, 42, 44, 46
11-130 299-15	53
11-130 311-15	54, 55
11-130 377-15	36, 41, 43, 45
11-130 569-15	20
11-130 914-15	54, 55
11-130 939-15	31
11-133 550-15	20
11-133 580-15	20
11-173 174-15	61, 62
11-173 174-25	11, 24
11-173 177-25	11, 39, 47 51
11-173 225-25	20
11-174 086-15	24
11-174 089-25	14
11-174 176-15	11, 13, 25
11-174 233-15	41, 59
11-174 914-05	26
11-178 172-15	11, 25, 57
11-186 976-15	39, 47, 51
11-187 009-15	33
11-187 012-15	33
11-210 038-15	39, 47, 51
11-210 041-15	28, 30
11-210 081-15	33
11-210 084-15	57
11-210 168-25	40, 48, 50
11-210 178-15	33
11-210 186-15	14
11-210 222-15	20
11-210 265-15	14
11-210 938-15	11
11-225 178-25	57
11-225 223-15	11, 21
11-225 232-15	12
11-225 381-15	15
11-225 902-15	36, 41, 43, 45
11-250 165-25	11
11-250 166-15	11, 57
11-305 239-15	26
11-305 299-15	13
11-314 166-15	23
11-314 946-15	11, 13, 19, 23, 32, 57
11-314 963-15	23
11-317 949-15	26, 32
11-317 950-15	23, 33
11-317 971-15	22
11-320 350-05	18
11-330 085-15	12, 22, 24, 56
11-330 166-15	26
11-330 169-15	35, 36, 38 41, 43, 45, 59
11-330 217-15	16
11-330 220-15	11, 12, 13, 17, 25
11-330 277-15	19
11-330 952-15	12, 16, 18, 24
11-330 960-15	14, 17, 57
11-330 962-15	16
11-335 085-15	28, 30
11-335 902-15	14, 15, 17
11-341 088-15	53
11-341 220-15	13
11-341 277-15	12, 17, 18, 19, 57
11-341 286-15	52, 53
11-341 901-15	19, 22, 28, 30
11-341 902-15	14, 15, 17, 18, 19, 23
11-450 403-15	61, 62
11-460 112-15	38
11-460 118-15	59
11-460 157-15	36
11-460 163-15	62
11-460 202-15	52
11-460 304-15	35
11-625 407-11	37
12-005 154-15	33
12-005 171-15	31
12-005 195-15	33, 52
12-005 215-15	31, 49
12-024 121-15	27, 29

29 Pfaff 561; 563; 563 H

No.	Seite Page Pages Página
12-024 171-15	18, 26, 27, 28, 29, 30, 31, 60
12-024 172-15	15, 28, 30, 31
12-024 191-15	23, 25, 37, 42, 44, 46, 52, 53, 60, 63
12-024 211-15	20, 37, 38
12-085 170-15	26
12-177 100-05	34
12-177 142-05	62
12-305 114-15	12, 49
12-305 144-15	26, 31, 33, 35, 60
12-305 174-15	23, 38, 60
12-305 224-15	37
12-305 414-15	60
12-315 170-15	53
12-335 111-15	53
12-335 191-15	34, 37, 42, 44, 46, 54, 55
12-335 210-15	62
12-360 063-05	27, 29, 40, 48, 50
12-500 151-45	37, 42, 44, 46
12-500 170-45	33, 38
12-500 190-45	23
12-500 210-45	62
12-500 211-45	36, 41, 43, 45
12-510 110-45	49
12-510 111-15	33
12-513 160-45	25
12-610 200-45	14, 17, 18, 25
12-610 210-45	11, 21
12-610 230-45	19, 26, 28, 30
12-610 240-45	14
12-610 280-45	18
12-618 120-45	26
12-624 170-45	26
12-624 200-45	27, 29
12-624 310-45	18
12-640 070-55	56
12-640 090-55	25
12-640 130-55	13, 22, 31
12-640 150-55	12, 27, 29, 31, 33, 52
12-640 170-55	25, 26
12-640 200-55	25
12-660 390-45	19, 28, 30
13-010 198-05	22
13-030 310-05	13
13-033 148-05	32
13-033 190-05	28, 30
13-033 220-05	26
13-033 268-05	31
13-033 280-05	26
13-033 460-05	28, 30
13-052 085-55	14, 24
13-052 088-55	17
13-052 095-55	22, 32
13-052 151-15	19, 28, 30
13-052 248-15	36, 41, 43, 45
13-052 256-15	13, 35
13-060 400-05	20
13-063 193-05	28, 30
13-064 247-05	12, 27, 29
13-070 981-05	36, 38, 41, 43, 45, 59
13-210 291-05	59
13-210 471-05	38
13-250 097-25	12, 22
14-010 570-01	19, 28, 30
14-010 660-01	18
14-010 665-01	23
14-015 624-91	17
14-016 080-01	19, 28, 30
14-016 131-91	17
14-016 133-01	17
14-017 620-01	17
14-018 623-01	14
14-018 624-91	14
14-018 643-01	14, 24
14-018 644-91	14, 24
14-215 013-13	24
14-215 016-13	23
14-215 022-13	11, 21
14-215 028-13	22
14-215 304-43	24
14-218 050-01	25
14-650 214-05	19, 28, 30
14-650 275-05	19
14-680 030-15	17
14-680 050-15	14
14-680 070-15	14, 24
15-032 001-45	36, 37, 42, 43, 44, 45, 46
15-032 001-55	19
15-032 006-45	41, 43, 45
15-120 002-05	19
15-120 702-05	19
15-120 709-05	31
15-120 712-05	31
15-125 904-05	19
15-718 071-51	18
16-049 020-11	15, 28, 30, 31
16-049 021-11	15, 28, 30, 31
16-049 040-11	35
16-437 020-55	64
16-437 040-55	64
16-437 050-55	64
16-437 060-55	64
16-437 070-55	64
16-437 080-55	64
16-437 100-55	64
16-437 110-55	64
16-437 120-55	64
16-437 140-55	64
18-272 010-65	44, 46
18-277 001-91	37, 42, 44, 46
18-278 005-91	37, 42, 44, 46
18-279 010-05	37, 42, 44, 46
18-372 001-91	37, 42, 44, 46
18-373 011-61	52
18-373 011-91	37, 42, 44, 46
18-378 001-91	37, 42, 44, 46
18-378 002-91	37, 42, 44 46
70-16 31-5111	61
70-16 32-0101	62
70-16 83-0510	52
70-37 15-0001	40, 48, 50
70-37 45-0002	39, 40, 47, 48, 50, 51
70-37 70-0006	37, 42, 43, 44, 45, 46
71-01 00-0084	33
71-11 00-0183	61, 62
71-11 00-0185	62
71-11 00-0186	61

No.	Seite Page Pages Página
71-11 00-0188	33
71-11 00-0213	61, 62
71-11 00-0232	35
71-11 00-0246	61, 62
71-11 00-0262	61
71-11 00-0300	33
71-12 00-0024	40, 48, 50
71-12 00-0025	39, 47, 51
71-12 00-0575	35
71-12 00-0576	35
71-12 00-0577	34
71-13 00-0439	39, 47, 51, 53
71-13 00-0440	53
71-14 00-0010	63
71-14 00-0014	63
71-14 00-0025	63
71-14 00-0029	63
71-14 00-0032	63
71-16 00-0065	35
71-16 00-0112	35
71-16 00-0118	35, 37, 38, 44, 46, 52
71-16 00-0198	31, 33
71-16 00-0204	53
71-16 00-0208	39, 40, 42, 43, 45, 47, 48, 49, 50, 51, 52, 53
71-17 00-0131	26
71-17 00-0192	49
71-17 00-0193	38
71-17 00-0199	33
71-21 00-0125	26, 33
71-37 00-0108	62
71-37 00-0131	26
71-37 00-0132	33, 49
71-37 00-0133	33, 39, 47, 51
71-37 00-0167	39, 47, 51
71-37 00-0173	39, 40, 47, 48, 50, 51
71-37 00-0223	40, 48, 50
71-37 00-0292	62
71-37 00-0306	39, 47, 51, 53
71-37 00-0309	39, 47, 51
71-37 00-0320	61, 62
71-37 00-0332	61, 62
71-37 00-0333	61, 62
71-59 00-0089	34, 35
71-59 00-0098	34, 35
71-59 00-0237	35
71-59 00-0242	34
71-59 00-0264	34
71-59 00-0265	34
71-59 00-0331	34
71-59 00-0332	34
71-59 00-0333	34
71-59 00-0334	34
71-59 00-0335	34
71-59 00-0336	34
71-59 00-0368	34
71-85 00-0115	58
71-85 00-0116	58
40-754 701-00	59
61-111 600-35	58
61-111 653-99	58
91-000 073-25	12
91-000 250-15	19
91-000 366-25	32
91-000 390-05	19
91-000 407-15	16, 21, 22, 24
91-000 422-25	16, 21, 22, 24
91-000 678-15	19
91-000 790-15	19
91-001 824-05	25
91-002 065-05	13, 32
91-002 134-05	19
91-004 181-05	16
91-006 814-05	13, 32
91-006 818-05	13
91-008 627-05	32
91-008 648-05	13
91-009 026-05	19
91-009 035-25	13
91-009 069-05	19
91-009 074-41	19
91-009 076-61	19
91-009 298-05	19
91-010 180-05	32
91-010 181-25	32
91-010 183-05	32
91-010 184-05	32
91-010 215-05	13
91-018 045-05	27, 29, 40, 48, 50
91-020 400-25	11, 57
91-021 124-15	33
91-025 374-05	56
91-025 376-05	56
91-027 289-15	41, 59
91-027 370-05	41, 59
91-027 371-12	41, 59
91-027 624-91	6
91-027 630-91	6
91-027 645-75/799	59
91-029 007-91	59
91-029 033-45	59
91-029 036-70/994	60
91-029 692-75/792	59
91-029 946-91	59
91-032 087-45	38, 59
91-033 915-21	59
91-038 738-45	37
91-038 800-71/799	59
91-038 801-75/799	59
91-038 885-91	59
91-047 260-04	56
91-048 673-05	56
91-050 596-05	26
91-051 155-93	56
91-053 944-25	56
91-053 946-25	56
91-056 192-25	11
91-056 193-25	11, 57
91-056 197-91	11
91-056 198-21	11
91-056 760-05	11
91-061 337-05	11, 21
91-069 010-05	18
91-069 045-05	11, 21
91-069 046-05	13
91-069 056-05	12, 21
91-069 062-45	11, 17, 21
91-069 075-01	12

29 Pfaff 561; 563; 563 H

No.	Seite Page Pages Página
91-069 079-72/995	12
91-069 095-04	23
91-069 105-25	13
91-069 106-25	11
91-069 127-05	15
91-069 131-91	15
91-069 135-05	15
91-069 150-75/995	20
91-069 160-04	14
91-069 165-15	31
91-069 172-15	20
91-069 175-01	12
91-069 208-05	18
91-069 224-05	19
91-069 226-05	19, 28, 30
91-069 231-05	19
91-069 240-05	17
91-069 241-05	17
91-069 259-05	19
91-069 284-91	18
91-069 285-05	18
91-069 287-05	16
91-069 289-05	16
91-069 290-91	16
91-069 291-25	16
91-069 293-05	18
91-069 296-12	16
91-069 299-05	20
91-069 310-05	18
91-069 311-92	18
91-069 314-05	18
91-069 316-91	18
91-069 322-01	12
91-069 323-91	12
91-069 335-72/993	41, 59
91-069 371-11	25
91-069 371-92	25
91-069 386-91	23
91-069 392-05	20
91-069 434-91	22
91-069 444-92	24
91-069 453-05	11, 57
91-069 456-05	11, 57
91-069 457-05	11, 57
91-069 458-05	11, 57
91-069 459-05	11, 57
91-069 460-01	11, 57
91-069 464-05	11, 57
91-069 465-25	11, 57
91-069 466-25	11, 57
91-069 467-05	11, 57
91-069 468-15	24
91-069 469-25	11, 57
91-069 471-25	11, 57
91-069 473-91	24
91-069 475-15	24
91-069 476-05	24
91-069 483-04	25
91-069 484-04	25
91-069 486-05	25
91-069 489-12	25
91-069 490-11	25
91-069 493-11	25
91-069 496-05	25
91-069 497-05	25
91-069 498-11	25
91-069 501-15	25
91-069 513-15	25
91-069 514-05	25
91-069 517-05	25
91-069 518-75/995	24
91-069 547-91	18
91-069 554-92	16
91-069 555-05	16
91-069 558-92	12
91-069 562-05	12
91-069 568-05	22
91-069 571-92	12, 22, 24, 56
91-069 577-91	25
91-069 578-05	23
91-069 579-05	13, 22
91-069 585-25	59
91-069 595-04	25, 59
91-069 598-11	25
91-069 599-15	25
91-069 600-15	25
91-069 601-15	25
91-069 620-12	25
91-069 624-12	25
91-069 628-91	25
91-069 629-05	25
91-069 630-91	25
91-069 632-05	25
91-069 634-72/995	20
91-069 642-05	17
91-069 646-04	17
91-069 650-45	23
91-069 651-92	23
91-069 657-05	23
91-069 661-12	12
91-069 709-12	22
91-069 717-04	22
91-069 718-05	22
91-069 719-05	22
91-069 722-01	72
91-069 729-05	23
91-069 730-05	23
91-069 732-15	23
91-069 735-07	23
91-069 738-15	23
91-069 742-25	59
91-069 746-15	14
91-069 763-93	22
91-069 764-91	22
91-069 770-04	23
91-069 771-15	23
91-069 773-92	23
91-069 788-05	25
91-069 789-15	25
91-069 790-05	25
91-069 794-91	22
91-069 795-01	12, 22
91-069 954-05	27, 29
91-069 955-05	27, 29
91-085 195-15	39, 47, 51
91-069 955-05	27, 29
91-085 195-15	39, 47, 51
91-086 849-25	40, 48, 50

No.	Seite Page Pages Página
91-086 850-25	40, 48, 50
91-086 851-25	40, 48, 50
91-087 145-75/798	48, 50
91-087 175-25	40, 48, 50
91-087 176-25	40, 48, 50
91-087 331-55	40
91-087 333-15	48, 50
91-087 904-71/798	40, 48, 50
91-087 961-71/951	43, 45
91-088 274-91	39, 47, 51
91-088 277-25	39, 47, 51
91-088 871-71/951	41
91-088 883-11	33
91-088 912-71/995	33
91-090 583-71/993	61
91-090 584-71/993	61
91-090 585-91	61
91-090 586-91	61
91-090 831-71/993	62
91-090 832-91	62
91-092 210-91	39, 47, 51
91-092 845-91	52
91-093 063-05	39, 47, 51, 53
91-094 432-91	53
91-094 480-91	53
91-095 645-91	62
91-095 647-71/993	62
91-095 648-91	62
91-095 651-71/993	62
91-095 829-91	37, 44, 46
91-095 837-91	42, 43, 45
91-095 850-91	26, 31
91-095 982-71/993	61
91-095 983-91	61
91-095 984-91	61
91-095 985-91	61
91-095 997-71/993	61
91-096 334-15	27, 29
91-097 149-15	36
91-098 827-15	11, 57
91-098 888-75/993	61, 62
91-099 766-71/993	62
91-099 811-05	39, 47, 51
91-099 904-45	26
91-100 076-15	16
91-100 117-15	22
91-100 143-05	27, 29
91-100 270-25	40, 48, 50, 53
91-100 331-15	12
91-100 400-15	14, 24
91-101 756-05	15
91-101 758-15	15
91-105 447-25	32
91-106 033-15	25
91-106 133-05	26
91-106 182-05	26
91-106 375-05	19
91-106 401-05	26
91-107 265-05	25
91-107 723-05	63
91-107 888-15	39, 47, 51
91-107 889-15	39, 47, 51
91-107 890-05	39, 47, 51
91-107 891-15	39, 47, 51
91-118 229-05	33
91-118 893-92	28, 30
91-118 953-15	35
91-118 955-15	35
91-118 956-15	35
91-119 026-25	32
91-129 118-75/994	60
91-129 139-01	59
91-129 153-91	59
91-129 159-70/994	60
91-129 443-12	26
91-129 452-91	6
91-129 456-91	6
91-129 541-91	6
91-129 621-75/994	60
91-129 637-75/994	60
91-129 640-70/994	60
91-129 644-05	60
91-129 645-45	60
91-129 649-45	60
91-129 680-25	60
91-129 783-71/994	60
91-129 784-71/994	60
91-129 785-05	60
91-129 916-91	6
91-129 917-91	6
91-129 919-91	6
91-129 920-91	6
91-130 865-15	33
91-140 945-05	19
91-150 052-25	57
91-165 501-75/995	52
91-165 502-75/993	52
91-165 504-15	52
91-165 508-15	52
91-165 509-15	52
91-165 510-05	52
91-165 511-15	52
91-165 517-15	52
91-165 518-15	52
91-165 520-05	52
91-165 521-15	52
91-165 523-11	52
91-165 524-15	52
91-165 525-15	52
91-165 526-05	52
91-165 582-91	52
91-165 583-95	52
91-165 588-91	52
91-165 600-15	57
91-165 618-05	19
91-165 812-05	53
91-165 814-15	53
91-165 819-15	53
91-165 821-12	53
91-165 839-15	53
91-165 841-05	53
91-165 842-05	53
91-165 843-05	53
91-165 844-91	53
91-165 845-05	53
91-165 846-91	53
91-165 847-05	53
91-165 852-15	36, 38, 41, 43, 45, 49

29 Pfaff 561; 563; 563 H

No.	Seite Page Pages Página
91-165 877-91	53
91-165 887-91	36, 43, 45
91-165 929-11	52
91-165 935-71/798	52
91-165 944-91	52
91-166 939-71/798	52
91-167 299-91	31
91-167 553-11	26
91-167 556-11	26
91-167 559-05	26
91-167 560-05	26
91-167 636-05	26
91-167 680-05	31
91-167 750-05	38
91-167 786-91	32
91-167 789-25	32
91-167 803-91	32
91-167 865-05	12, 22
91-168 039-05	11
91-168 041-05	11
91-168 063-25	11
91-168 144-05	19, 59
91-168 235-05	19
91-168 344-05	18
91-168 347-05	18
91-168 415-15	26
91-168 480-15	14
91-168 833-07	18
91-168 901-92	28, 30
91-168 906-02	26
91-168 907-05	26
91-168 909-15	26
91-168 910-05	26
91-168 917-05	26
91-168 918-05	26
91-168 927-15	26
91-168 934-05	26
91-168 934-92	26
91-168 938-91	26
91-168 939-15	26
91-168 945-05	31
91-169 099-75/768	21, 24
91-169 166-05	12
91-169 207-15	26
91-169 245-01	28, 30
91-169 252-75/995	25
91-169 254-05	25
91-169 290-91	11, 57
91-169 301-12	24
91-169 318-91	56
91-169 319-01	56
91-169 322-15	56
91-169 323-15	56
91-169 352-05	14
91-169 393-12	25
91-169 395-04	25, 59
91-169 457-12	22
91-169 473-72/995	25
91-169 474-05	25
91-169 475-15	25
91-169 476-75/995	25
91-169 477-71/995	25
91-169 582-05	26
91-169 974-05	19
91-170 560-04	25, 59
91-170 650-11	25
91-170 726-05	15
91-170 909-92	19
91-170 911-92	23
91-170 913-72/993	14
91-170 914-12	17
91-170 925-91	15
91-170 926-92	15
91-170 976-04	18
91-171 003-75/993	11
91-171 050-05	12
91-171 064-15	12
91-171 068-05	12, 27, 29
91-171 162-91	17
91-171 173-92	19, 28, 30
91-171 175-12	18
91-171 178-91	16
91-171 181-05	20
91-171 182-15	20
91-171 182-92	20
91-171 203-05	19
91-171 205-07	18
91-171 337-12	18
91-171 376-91	16
91-171 409-12	18
91-171 412-71/993	59
91-171 413-15	59
91-171 441-01	23
91-171 459-92	12, 27, 29
91-171 460-91	12, 27, 29
91-171 461-05	12, 27, 29
91-171 502-91	28, 30
91-171 529-15	28, 30
91-171 531-91	28, 30
91-171 537-75/994	38, 59
91-171 539-12	35
91-171 542-91	35, 36, 38, 41, 43, 45, 59
91-171 543-05	35, 36, 38, 41, 43, 45, 59
91-171 544-12	35, 36, 38, 41, 43, 45, 59
91-171 562-15	32
91-171 563-21	32
91-171 565-01	32
91-171 677-15	57
91-171 778-01	19
91-171 783-01	28, 30
91-171 787-05	28, 30
91-171 794-05	28, 30
91-171 795-91	28, 30
91-171 796-71/794	19
91-171 797-05	19, 28, 30
91-171 798-71/794	19
91-171 832-91	19, 28, 30
91-171 833-05	19, 28, 30
91-171 834-92	28, 30
91-171 835-91	26
91-171 850-91	28, 30
91-171 851-05	28, 30
91-171 853-15	28, 30
91-171 854-15	28, 30
91-171 874-12	17
91-171 875-12	17

No.	Seite Page Pages Página
91-171 883-15	15
91-171 898-91	19, 28, 30
91-171 899-91	28, 30
91-171 903-15	15
91-171 904-71/798	15
91-171 905-91	15
91-171 906-75/798	15
91-171 909-91	19
91-171 910-91	19
91-171 911-15	57
91-171 922-91	16
91-171 951-05	20
91-171 953-11	28, 30
91-171 954-15	28, 30
91-172 676-05	18
91-172 903-72/951	36, 41, 43, 45
91-172 903-75/951	36, 41, 43, 45
91-172 910-05	36, 41, 43, 45
91-172 925-15	36, 43, 45
91-172 925-92	36, 43, 45
91-172 995-92	41
91-172 996-71/993	41
91-173 967-15	33
91-173 968-05	33
91-174 002-05	12
91-174 003-05	56
91-174 005-91	23
91-174 016-05	12
91-174 026-05	31
91-174 043-05	19
91-174 044-05	19
91-174 045-05	19
91-174 046-91	19
91-174 058-11	31
91-174 059-05	27, 29
91-174 060-12	31
91-174 063-11	31
91-174 067-15	31
91-174 068-15	31
91-174 070-15	31
91-174 091-93	17
91-174 115-05	27, 29, 40, 48, 50
91-174 124-25	15
91-174 154-12	23
91-174 155-12	23
91-174 156-12	23
91-174 176-91	23
91-174 210-91	38
91-174 215-15	32
91-174 216-15	32
91-174 217-91	32
91-174 221-05	33
91-174 232-01	11, 21
91-174 237-05	13
91-174 238-05	13
91-174 239-91	13
91-174 272-91	31
91-174 273-05	12
91-174 297-71/798	13
91-174 359-05	14
91-174 361-01	27, 29
91-174 363-92	18
91-174 365-91	18
91-174 392-12	63
91-174 392-15	63
91-174 396-05	13
91-174 397-75/993	27, 29, 40, 48, 50
91-174 399-71/993	15
91-174 400-05	27, 29, 40, 48, 50
91-174 401-71/993	27, 29, 40, 48, 50
91-174 408-75/993	11
91-174 412-71/993	11
91-174 418-05	49
91-174 420-11	49
91-174 421-91	49
91-174 424-15	41, 43, 45
91-174 425-12	41, 43, 45 49
91-174 434-01	27, 29
91-174 438-25	13
91-174 439-25	13
91-174 440-25	13
91-174 441-05	13
91-174 442-15	13
91-174 453-91	13
91-174 471-05	17
91-174 472-05	17
91-174 474-25	53
91-174 482-92	21
91-174 482-93	11
91-174 483-04	11
91-174 484-01	11
91-174 485-01	21
91-174 487-04	21
91-174 488-91	14
91-174 488-92	14
91-174 490-01	21
91-174 491-91	11
91-174 492-91	21
91-174 501-15	20
91-174 502-15	20
91-174 503-15	20
91-174 507-05	19
91-174 510-75/995	33
91-174 511-75/995	40, 48, 50, 52, 53
91-174 535-70	52
91-174 541-01	22
91-174 543-91	21
91-174 548-91	22
91-174 550-91	21
91-174 551-91	12
91-174 552-05	22
91-174 553-05	22
91-174 554-75/995	20
91-174 572-71/995	20
91-174 573-71/995	20
91-174 581-05	31
91-174 582-05	26, 31
91-174 591-05	53
91-174 593-75/995	20
91-174 604-75/993	20
91-174 605-75/993	20
91-174 606-91	17
91-174 680-91	17
91-174 681-05	17
91-174 682-05	14
91-174 684-91	14
91-174 700-75/995	20
91-174 708-01	24

29 Pfaff 561; 563; 563 H

No.	Seite Page Pages Página
91-174 708-92	24
91-174 733-25	11
91-174 740-11	28, 30
91-174 745-12	57
91-174 747-15	57
91-174 748-15	57
91-174 750-71/993	57
91-174 751-25	57
91-174 757-91	57
91-174 759-93	14
91-174 760-15	11, 57
91-174 777-01	19
91-174 778-01	19
91-174 801-05	18
91-174 834-05	11, 57
91-174 835-92	56
91-174 851-05	27, 29
91-174 853-11	13
91-174 854-91	13
91-174 855-05	26
91-174 856-05	26
91-174 857-11	26
91-174 860-05	26
91-174 861-05	26
91-174 862-05	26
91-174 863-12	26, 31
91-174 865-91	26
91-174 867-91	27, 29
91-174 875-05	27, 29
91-174 879-05	11, 57
91-174 893-05	18
91-174 914-05	14
91-174 915-15	21
91-174 959-71/993	57
91-175 196-11	38
91-175 198-15	38
91-175 201-15	38
91-175 201-92	38
91-175 203-05	18
91-175 206-05	49
91-175 210-12	27, 29, 40, 48, 50
91-175 217-15	15
91-175 244-05	38
91-175 265-12	33
91-175 354-15	33
91-175 506-71/951	36
91-175 514-71/993	37, 42
91-175 540-05	28, 30
91-175 557-01	27, 29
91-175 690-05	19
91-175 717-15	36, 41, 43, 45
91-175 729-15	33
91-175 732-15	33
91-175 763-91	27, 29
91-175 785-05	19
91-175 805-91	33
91-175 838-15	28, 30
91-175 897-12	16
91-176 051-71/993	44, 46
91-176 063-15	52
91-176 378-05	18
91-177 464-75/993	37, 42, 44, 46
91-186 163-25	53
91-186 552-15	53
91-186 553-11	53
91-187 293-75/993	54, 55
91-700 335-15	52
91-700 388-15	56
91-700 409-15	56
91-700 717-15	56
91-700 785-15	18
91-700 961-15	28, 30
91-701 179-15	12, 21, 22
91-701 346-15	25
91-701 391-15	25
91-701 511-15	25
91-701 515-25	59
91-701 522-25	32
91-701 664-15	13
95-600 649-05	33
97-30 118-345	59
97-30 168-655	59
97-30 179-995	38
99-069 713-01	23
99-069 722-01	22
99-096 072-91	35
99-115 034-15	60
99-115 037-45	60
99-115 300-91	52
99-115 411-91	54, 55
99-133 752-01	37, 42, 44, 46
99-133 922-05	52
99-134 008-91	37, 42, 43, 44, 45, 46
99-134 299-91	37, 42, 44, 46
99-134 369-91	37, 42, 44, 46
99-134 401-05	57
99-134 452-91	37, 42, 44, 46
99-135 108-91	52
99-135 206-91	36, 43, 45
99-135 350-91	37, 42, 44 46
99-135 549-91	36, 41, 43, 45
99-135 627-91	52
99-135 629-05	52
99-135 630-91	52
99-135 662-91	31
99-135 663-91	31
99-135 664-91	31
99-135 665-91	31
99-135 666-91	31
99-135 667-91	31
99-135 774-91	52
99-135 775-91	52
99-135 776-91	52
99-135 777-95	52
99-135 778-91	52
99-135 779-45	52
99-135 780-91	52
99-135 781-91	52
99-135 782-45	52
99-135 783-91	52
99-135 836-91	52
99-135 838-91	31
99-135 920-91	41, 43, 45
99-136 489-91	54
99-136 546-91	55
99-136 558-91	54, 55
99-136 559-91	54, 55
99-136 560-91	54

No.	Seite Page Pages Página	No.	Seite Page Pages Página	No.	Seite Page Pages Página	No.	Seite Page	Pages Página
99-136 675-91	54, 55							
99-136 676-91	54, 55							
99-136 677-05	54, 55							
99-136 678-05	54, 55							
99-136 680-91	54, 55							
280-0-120 144	6							
280-1-120 122	6							
280-1-120 239	6							
280-1-120 247	6							
24 101-2.205-4	33, 37, 39, 40, 44, 46, 47, 48, 50, 51, 53							
24 132-2.204-4	42, 43, 45							
24 811-8.020-4	33							
25 308-8.202-5	52							
25 308-8.204-0	37, 42, 44, 46, 52, 54							
25 308-8.206-0	37, 42, 44, 46, 54, 55							
26 534-3.005-0	21							
26 536-3.020-9	12, 21, 22							